2022-23 EDITION

MICHELIN TECHNICAL DATA

EARTHMOVER TIRES









MICHELIN



EARTHMOVER TIRES

The information provided herein is for informational purposes only and may not be used or relied upon for legal or statutory action. For technical and safety reasons, a tire should never be used beyond the limits of the technical specifications for which it has been approved and all relevant recommendations as provided herein should be followed. Michelin is not responsible for any use, fitting, storage, maintenance, or handling outside stated recommendations.

MICHELIN® tires are designed for a specific use as defined in this catalog. Any other use constitutes an abnormal use. However, in some circumstances, Michelin may issue a waiver which will specify the conditions and the permitted operational limits for a specific application. If a tire is to be used differently than what it is designed for, please consult your nearest Michelin Representative for further guidance. **Michelin expressly denies any responsibility for any abnormal use of its tires or any use different from the tire's intended design in the absence of express written permission (derogation) from an authorized Michelin Representative.**

Further, correct usage and maintenance are necessary to achieve proper performance and to maximize life. Therefore, it is recommended that users adhere to all safety and usage recommendations. However, you must note that these recommendations may be subject to more restrictive local legal and/or regulatory requirements.

Specifically, tire load and pressure tables included in this book are classified according to the various applications of machines. In the load and pressure tables, the shaded boxes indicate the normalized values. These values reflect optimal use, the best balance of performances. Again, these values are given for informational purposes only and may not be used for legal or statutory actions.

Finally, unless otherwise specified, MICHELIN® off-the-road, industrial, and compact tires comply with internationally accepted standards that are established by TRA (Tire and Rim Association), ETRTO (European Tire and Rim Technical Organisation), JATMA (Japan Automobile Tire Manufacturers Association), and/or ISO (International Standards Organisation). Among other things, the standards encompass load capacity, inflation pressure, overall diameter, overall width, and related valves and rims. Some minor differences may exist between these standards.

PERFORMANCE

Any and all tire performance claims or comparisons contained herein are for informational purposes only to aid in the selection of a tire and **do not** constitute any form of performance guarantee or warranty. Individual results may vary. Such information may not be used as a basis for any performance guarantee or warranty claim.

Following publication, the information herein is subject to change in Michelin's sole discretion.

MICHELIN TECHNICAL DATA

EARTHMOVER TIRES

CONTENT CHAPTER

TIRE RANGE CHART	PAGE 5
PRODUCT PRESENTATION	PAGE 10
TIRE CHARACTERISTICS	PAGE 61
GENERAL INFORMATION	PAGE 129

TIRE RANGE CHART

RIGID DUMP TRUCKS



E2
MICHELIN® XVC™



E3
MICHELIN® XDC®



E3
MICHELIN® XDR® 2 S



E3
MICHELIN® X-TRACTION™ S



E4
MICHELIN® XDR® +



E4
MICHELIN® XDR® 2+



E4
MICHELIN® XDR® 250



E4
MICHELIN® XDR® 250+



E4
MICHELIN® XDR® 4 SPEED + MD



E4
MICHELIN® XDR® 4 SPEED MC



E4
MICHELIN® XDR® 3



E4
MICHELIN® XDR® 3+



E4
MICHELIN® XDR® 3 EXTRA LOAD



E4
MICHELIN® XDR® 3+ EXTRA LOAD



E4
MICHELIN® XDR® 4 EXTRA LOAD



E4
MICHELIN® XDT®



E4
MICHELIN® XD GRIP



E4
MICHELIN® XD MINEWORKS



E4
MICHELIN® X-HAUL



E4
MICHELIN® XHDT

TIRE RANGE CHART

RIGID DUMP TRUCKS — CONTINUED



TIRE RANGE CHART

LOADERS



L2	L2	L3	L3	L4
MICHELIN® X SNOPLUS®	MICHELIN® XTLA™	MICHELIN® XHA® 2	MICHELIN® XLD™ 65	MICHELIN® XLD® D1



E4/L4	L4	L5	L5	L5	L5
MICHELIN® XTXL®	X® MINE L4** 70/70 R 57	MICHELIN® XLD® D2	MICHELIN® XTRA POWER	MICHELIN® X® MINE D2	MICHELIN® X® MINE D2 EXTRA LOAD

GRADERS



G2	L2	L2	L3	L3
MICHELIN® XGLA2™	MICHELIN® X® SNOPLUS	MICHELIN® XTLA™	MICHELIN® XHA® 2	MICHELIN® XLD™ 65



L4	L5
MICHELIN® XLD® D1	MICHELIN® XLD® D2

TIRE RANGE CHART

UNDERGROUND MINE MACHINES



ARTICULATED DUMP TRUCKS



TIRE RANGE CHART

SCRAPERS



E3	E3	E3	E4
MICHELIN® XADN+®	MICHELIN® XTS®	MICHELIN® XMS™	MICHELIN® XRS™

CRANES AND TRANSPORT VEHICLES



E2	E2	E2	E2
MICHELIN® X-CRANE +® (M+S)	MICHELIN® XGC®	MICHELIN® XMH™ S	MICHELIN® X SNOPLUS®

COMPACTORS



C1
MICHELIN® X® LISSE COMPACTEUR™

MICHELIN TECHNICAL DATA

EARTHMOVER TIRES

PRODUCT PRESENTATION

MICHELIN XDR2 S PAGE 11
MICHELIN XDR 2+ PAGE 12
MICHELIN XDR 250 PAGE 13
MICHELIN XDR 250+ PAGE 14
MICHELIN XDR 4 SPEED + MD PAGE 15
MICHELIN XDR 4 SPEED MC PAGE 16
MICHELIN XDR 3 PAGE 17
MICHELIN XDR 3 27.00R49 PAGE 18
MICHELIN XDR 3+ MB4 &MB COMPOUND PAGE 19
MICHELIN XDR 3 EXTRA LOAD PAGE 20
MICHELIN XDR 3+ EXTRA LOAD MB4 PAGE 21
MICHELIN XDR 4 EXTRA LOAD PAGE 22
MICHELIN XD GRIP PAGE 23
MICHELIN XD MINEWORKS PAGE 24
MICHELIN XHDT PAGE 25
MICHELIN X-TRACTION PAGE 26
MICHELIN XTRA LOAD GRIP A4 & B COMPOUND PAGE 27
MICHELIN XTRA LOAD PROTECT A & B4 COMPOUND PAGE 28
MICHELIN X SNOPLUS PAGE 29
MICHELIN XTLA PAGE 30
MICHELIN XHA 2 PAGE 31
MICHELIN XLD 65 PAGE 32
MICHELIN XLD D1 PAGE 33
MICHELIN XTXL PAGE 34
MICHELIN X MINE L4 70/70 PAGE 35
MICHELIN XLD D2 PAGE 36
MICHELIN X TRA POWER L5 PAGE 37
MICHELIN X MINE D2 PAGE 38
MICHELIN X MINE D2 L5 HR PAGE 39
MICHELIN X MINE D2 L5 SR PAGE 40
MICHELIN X MINE D2 LC PAGE 41
MICHELIN X MINE D2 L5 PAGE 42
MICHELIN X MINE D2 EXTRA LOAD PAGE 43
MICHELIN XGLA2 PAGE 44
MICHELIN UM HAUL PAGE 45
MICHELIN X MINE D2 PRO PAGE 46
MICHELIN XSM D2+LC PAGE 47
MICHELIN XSM D2+ PAGE 48
MICHELIN XSM D2+ PRO PAGE 49
MICHELIN XADN+ A & B4 COMPOUND PAGE 50
MICHELIN XAD 65 PAGE 51
MICHELIN XTRA DEFEND PAGE 52
MICHELIN XS SAND PAGE 53
MICHELIN XTS PAGE 54
MICHELIN XMS PAGE 55
MICHELIN XRS PAGE 56
MICHELIN X-CRANE+ M+S PAGE 57
MICHELIN XGC PAGE 58
MICHELIN XMH S PAGE 59
MICHELIN X LISSE COMPACTEUR PAGE 60

MICHELIN XDR2 S

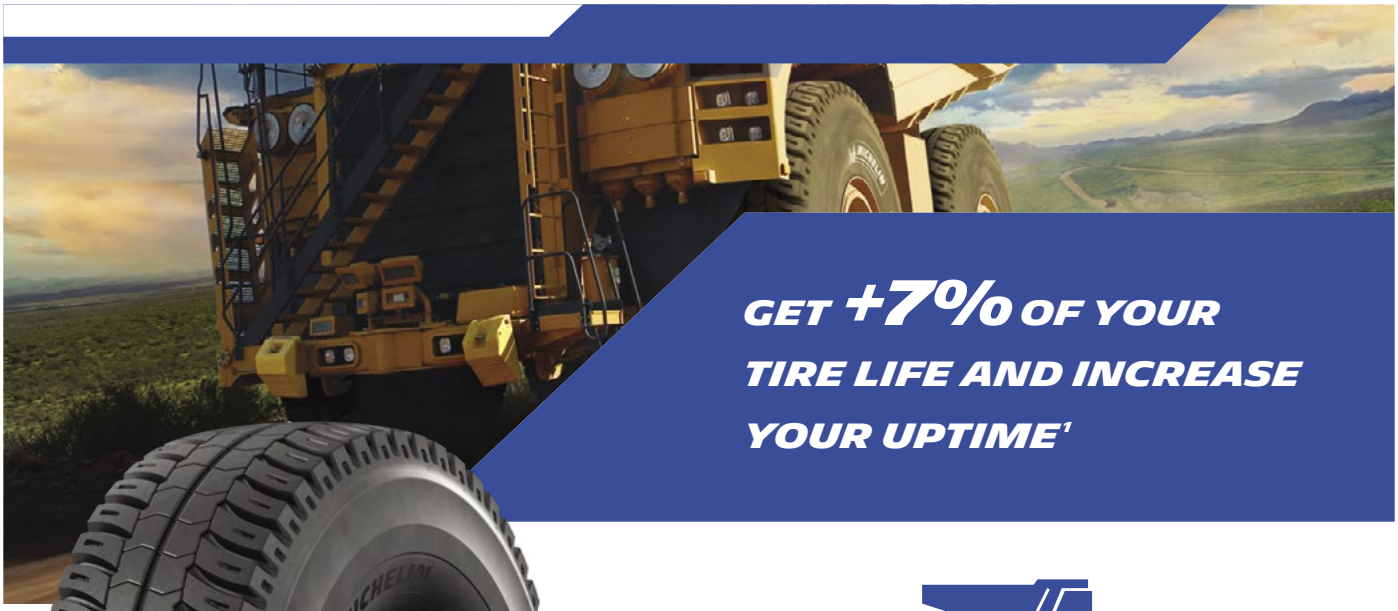

GET +7% OF YOUR TIRE LIFE AND INCREASE YOUR UPTIME[1]





For Rigid Dump Trucks

BETTER RESISTANCE TO AGGRESSIVE CONDITIONS AND CORROSION

Thanks to high resistance steel for stronger cables & plies and corrosion isolating cables design

BETTER TREAD ENDURANCE

A new tread pattern design with better thermal properties and better crown protection

BETTER BEAD AREA ENDURANCE

Experience a 20% wider bead bundle and better rim contact surface[1] thanks to Michelin's B2 technology

[1] Compared to the MICHELIN® 59/80R63 XDR® S tire.

MICHELIN XDR2+



MORE TRACTION, MORE ROBUST



For Rigid Dump Trucks

RELIABLE TRACTION

Adheres in loose ground and muddy conditions

STEEL ENCAPSULATED BY RUBBER

Corrosion spread prevention and increased robustness

MORE ROBUST BEAD AREA

Increased resistance and easier mountability



TIRE SIZE: 40.00R57

MICHELIN XDR 250



RUN HARDER, KEEP COOL, GET MORE

For Rigid Dump Trucks



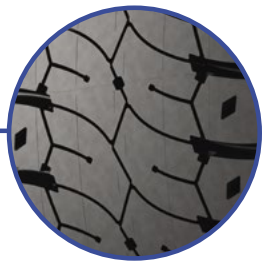

THE MOST PRODUCTIVE TIRE WITH AT LEAST 25%[1] MORE TKPH.

HIGH LOAD CAPACITY

TKPH increase thanks to a bigger tire

A COOLER TIRE

Increase TKPH without compromising tire life thanks to a new, more ventilated tread pattern

EXCEPTIONAL TIRE LIFE

Go further with the MICHELIN® XDR® 250 tires thanks to long-lasting innovations

[1] Compared to BRIDGESTONE 46/90R57 VRPS. Data gathered from 2015 BS databook.

MICHELIN XDR 250+



RUN HARDER, GET MORE LIFE



For Rigid Dump Trucks

INCREASE TIRE LIFE BY 8%[1] FOR MB4 AND MB, THANKS TO:

IMPROVED WEAR RESISTANCE

With second generation of revolutionary compounds—MB4 and MB

Superior level of carbon black dispersion, leading to increased wear resistance

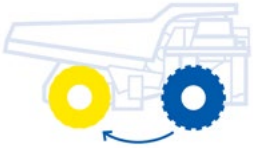

OPTIMIZED WEAR IN FRONT AND REAR AXLES

With MICHELIN® multilayer technology

- Blue layer[2] is optimized for front axles for the first cycle of the tire's life
- Yellow layer[2] underneath is optimized for rear axles for the second cycle of the tire's life
- Tires are designed to be rotated to the rear axles to increase tire life

INCREASED AGGRESSION RESISTANCE[1]

Optimized contact patch that delivers improved wear profile and protects your truck

[1] The new MICHELIN® 50/80R57 XDR® 250+ tire has INCREASED TIRE LIFE BY 8%, thanks to new generation of compounds, innovative tread layers(1) and improved aggression resistance(2).
(1) Compared to the MICHELIN® XDR® 250 50/80R57 tire. Average performance by mine site. Projected improvement in tire life based on field performance in 70 customer mine sites over 25 months. Actual results may vary.
(2) Compared to the MICHELIN® XDR® 250 50/80R57 tire, thanks to carrying the same load capacity at lower air pressure, according to the 2019 MICHELIN® Data Book.
[2] Blue and yellow tire colors depicted above are for dramatic purposes only. All MICHELIN® tires are black in color.

MICHELIN XDR 4 SPEED + MD



SPEED UP
YOUR PRODUCTIVITY



For Rigid Dump Trucks

HIGHEST TKPH ON THE MARKET[1]

TKPH

Significantly higher than the BRIDGESTONE® MASTERCORE® VREV E3A tire and 13% higher than the MICHELIN® XDR® 250 C tire[1]



MORE GRIP[2]

Optimized lateral grooves assist in faster evacuation of mud, dirt and water

SMARTER SUSTAINABILITY

Achieving more production in less time, this lighter tire supports a greener planet

[1] The MICHELIN® 50/80R57 XDR® 4 SPEED + MD tire offers the HIGHEST TKPH on the market, 1,822 TKPH. This significantly exceeds the BRIDGESTONE® 50/80R57 MASTERCORE® VREV® E3A tire with 1,333 TKPH.(1)
(1) TKPH figures from Michelin 2019 Databook and Bridgestone 2021 Databook. Actual site TKPH will vary based on many factors, including cycle distance, temperature, and load conditions.
[2] MORE GRIP thanks to optimized lateral grooves. (1)
(1) Improved grip compared to the MICHELIN® XDR® 250 C 50/80R57 tire.

MICHELIN XDR 4 SPEED MC



RUN FAST, RUN COOLER[1], RUN LONGER[2]





For Rigid Dump Trucks

7% LONGER TIRE LIFE[2]

Without compromising TKPH (1,608), thanks to a tread pattern that improves aggression resistance and a tread compound that is more wear resistant[2]

COOLER TIRE AT THE SAME SPEED[1]

Better thermal capacity reduces TPMS temperature alarms

SMARTER SUSTAINABILITY

Supports a greener planet by delivering longer life[2] without compromising TKPH

MORE GRIP[3]

Optimized lateral grooves assist in faster evacuation of mud, dirt and water

[1] COOLER Tire [(1)] AT THE SAME SPEED [(2)] thanks to better thermal capacity that reduces TPMS temperature alarms
[(1)] Compared to MICHELIN® 50/80R57 XDR® 250 C tire. Actual results may vary.
[(2)] TKPH figures from Michelin 2019 Databook and Bridgestone 2021 Databook. Actual site TKPH will vary based on many factors, including cycle distance, temperature, and load conditions.
[2] The new MICHELIN® 50/80R57 XDR® 4 SPEED MC tire PROVIDES EXCEPTIONAL tire LIFE with an INCREASE of A MINIMUM of 7% additional tire life [(1)]
[(1)] Compared to MICHELIN® 50/80R57 XDR® 250 C, based on average projected performance by mine site. Actual results may vary.
[3] MORE GRIP thanks to optimized lateral grooves.[(1)]
[(1)] Improved grip compared to the MICHELIN® XDR® 250 C 50/80R57 tire.

MICHELIN XDR 3



LONG LASTING INNOVATIONS



For Rigid Dump Trucks

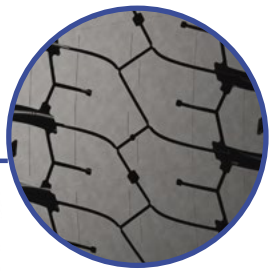

EXCEPTIONAL TIRE LIFE, INCREASED BY A MINIMUM OF 8-10%[3,4,5,6,7]

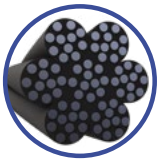

NEW CORROSION-PROOF CABLES

10% STRONGER[2]



REVOLUTIONARY TREAD PATTERN

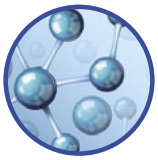

REVOLUTIONARY COMPOUNDS

Homogeneous mix designed to lead to a slower wear rate

TIRE SIZES[1]: 33.00R51[4], 37.00R57[6], 40.00R57[3], 50/90R57[5], 53/80R63, 59/80R63[3]

[1] Features may vary depending on specific tire size.
[2] Vs. MICHELIN® XDR® 2 tire, all sizes.
[3] Projected improvement in tire life based on wear rate improvements based on new MB4/MC4 tread compounds and on field performance in 14 customer mine sites over 29 months comparing the tread pattern of the MICHELIN® XDR® tire (on predecessor and prototype tires) to the tread pattern of the MICHELIN® XDR® 2 and MICHELIN® XDR® tires. Additional improvements in tread cuts and tread fatigue anticipated because of 17 degrees F lower tread operating temperature and corrosion-isolating cables. Actual results may vary.
[4] Compared to MICHELIN® XDR® 2 33.00 R 51, average performance by mine site. Projected improvement in tire life based on field performance in customer mine sites over 29 months of the MICHELIN® XDR® 2, MICHELIN® XDR® 250 and MICHELIN® XP 57, 40.00 R 57 and 53/80 R 63, tires that included individual design improvements incorporated into the MICHELIN® XDR® 3.
[5] Compared to MICHELIN® XDR® 2 50/90R57, average performance by mine site. Projected improvement in tire life based on field performance in customer mine sites over 29 months of the MICHELIN® XDR® 2, MICHELIN® XDR® 250 and MICHELIN® XP 57, 40.00 R 57 and 53/80 R 63, tires that included individual design improvements incorporated into the MICHELIN® XDR® 3.
[6] Compared to the MICHELIN® XDR® 2 37.00R57 tire, average performance by mine site. Projected improvement in tire life based on field performance in customer mine sites over 29 months of the MICHELIN® XDR® 2, MICHELIN® XDR® 250 and MICHELIN® XP 57, 40.00R57 and 53/80R63 tires that included individual design improvements incorporated into the MICHELIN® XDR® 3 tire. Actual results may vary.
[7] Without any compromise on TKPH.

MICHELIN XDR 3 27.00R49



CHOOSE YOUR BENEFIT



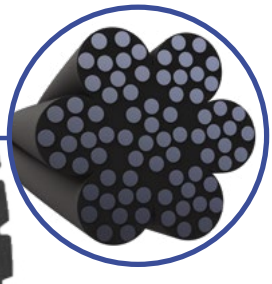

Steel encapsulated by rubber prevents corrosion spread, thus increasing aggression resistance.

For Rigid Dump Trucks

10% MORE TIRE LIFE[1]

You can get more life out of your tire thanks to a revolutionary tread pattern

10% MORE LOAD CAPACITY[2]

You can carry more because of the *** rating and an optimized tire design that improves stress distribution in the tire

TKPH

10% MORE TKPH[3]

You can go faster thanks to a cooler tire with an optimized tread design

TIRE SIZES: 27.00R49

[1] Compared to MICHELIN® XDR2 tires in ** usage. Projected improvement in tire life based on field performance in customer mine sites (over 29 months using the MICHELIN® XDR 2, MICHELIN® XDR 250, and MICHELIN® XP 57 tires in sizes 40.00R57 and 53/80R63 that include individual design improvements incorporated into the MICHELIN® XDR 3). Actual results may vary.
[2] Compared to the MICHELIN® XDR2 ** tire in size 27.00R49. Actual results may vary. (Source: 2017 MICHELIN® Earthmover Technical Databook).
[3] Compared to the MICHELIN® XDR2 tires in size 27.00R49. Actual results may vary. (Source: 2017 MICHELIN® Earthmover Technical Databook)."

MICHELIN XDR 3+ MB4 & MB COMPOUND*



LONGER-LASTING INNOVATIONS

For Rigid Dump Trucks

GET MORE TIRE LIFE:

AT LEAST
4%[1] MORE
WITH THE MB4 COMPOUND

AT LEAST
6%[1] MORE
WITH THE MB COMPOUND

TIRE SIZES

MICHELIN® XDR® 3+ 40.00R57 MB TIRE
MICHELIN® XDR® 3+ 40.00R57 MB4 TIRE
MICHELIN® XDR® 3+ 50/90R57 MB TIRE
MICHELIN® XDR® 3+ 50/90R57 MB4 TIRE
MICHELIN® XDR® 3+ 53/80R63 MB TIRE
MICHELIN® XDR® 3+ 53/80R63 MB4 TIRE
MICHELIN® XDR® 3+ 59/80R63 MB TIRE
MICHELIN® XDR® 3+ 59/80R63 MB4 TIRE

NEW MICHELIN® MULTILAYER TECHNOLOGY

Designed for optimized wear on front and rear axles

2ND GENERATION OF REVOLUTIONARY COMPOUNDS

Designed with a more homogeneous mix leads to a slower wear rate

* Please refer to the Earthmover Tire Compound section on page 147.

[1] Compared to the MICHELIN® XDR® 3 tire. Average performance by mine site. Projected improvement in tire life based on the result of 13 field performance placement customer mine sites. Actual results may vary.

MICHELIN XDR 3 EXTRA LOAD



BOOST PAYLOAD, BOOST PRODUCTIVITY!

For Rigid Dump Trucks

INCREASE YOUR MAXIMUM TRUCK PAYLOAD BY UP TO 12.6%[1] VS. MICHELIN® XDR® 3 (TKPH=15%[2])

STRONGER CABLES, NEW PLIES, ROBUST STRUCTURE

Increased robustness with steel encapsulated by rubber. Better resistance to aggression and extra load conditions.

REVOLUTIONARY COMPOUNDS

A slower wear rate thanks to a new mixing process

REVOLUTIONARY TREAD PATTERN

Interlocking blocks of rubber create better load distribution

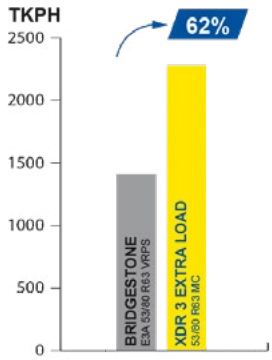

TIRE SIZE: 53/80R63

[1] Based on comparisons of maximum load capacity of the MICHELIN® XDR® 3 Extra Load to the MICHELIN® XDR® 3, size 53/80R63, as set forth in the 2018 Michelin Data Book, taking as a reference the technical data of the Komatsu 930-E4 truck. Actual results may vary, and may be impacted by many factors, to include road conditions, weather, environment, driving habits, tire size, equipment and maintenance.
[2] Based on comparisons of the MICHELIN® XDR® 3 Extra Load to the MICHELIN® XDR® 3, as set forth in the 2018 MICHELIN® Data Book.

MICHELIN XDR 3+ EXTRA LOAD MB4



For Rigid Dump Trucks

BUILT FOR EXTRA-LOAD CONDITIONS

Stronger cables[2], new plies and robust structure designed to deliver additional strength

DESIGNED TO HANDLE

- STEERING FORCE
- BRAKING FORCE
- BRAKING FORCE
- TORQUE TRANSMISSION

OPTIMIZED WEAR IN FRONT AND REAR AXLES

With MICHELIN® multilayer technology

- Blue layer[1] is optimized for front axles for the first cycle of the tire's life
- Yellow layer[1] underneath is optimized for rear axles for the second cycle of the tire's life
- Tires are designed to be rotated to the rear axles to increase tire life

IMPROVED WEAR RESISTANCE

Second generation revolutionary compound—MB4—extends tire life by at least 4%[3]

TKPH

HIGHEST TKPH ON THE MARKET

[1] Blue and yellow tire colors depicted above are for dramatic purposes only. All MICHELIN® tires are black in color.
[2] Based on comparisons of the MICHELIN® XDR® 3+ Extra Load tire to the MICHELIN® XDR® 3 tire, as set forth in the 2018 MICHELIN® Data Book.
[3] Compared to the MICHELIN® XDR® 3 tire. Average performance by mine site. Projected improvement in tire life based on the result of 13 field performance placement customer mine sites. Actual results may vary.

MICHELIN XDR 4 EXTRA LOAD



BOOST PAYLOAD, BOOST PRODUCTIVITY





For Rigid Dump Trucks

10% MORE LOAD CAPACITY[1]

Optimized to carry up to 115 tons, thanks to new cables, architecture and larger size

UP TO 2576 TKPH[2]

TKPH

INNOVATIVE TREAD PATTERN

Improved heat resistance, adherence and wear profile[3]



TIRE SIZE: 59/80R63

[1] With the new MICHELIN® XDR® 4 EXTRA LOAD 59/80R63, get 10% more load capacity, to carry up to 115 tons, due to new cables, architecture and larger size.
[2] Based on comparisons to the 2021 Bridgestone Databook and the 2020 Goodyear Databook. Actual results may vary.
[3] The new MICHELIN® XDR® 4 EXTRA LOAD 59/80R63 tire was designed for improved heat resistance, adherence and wear profile, thanks to a new tread pattern.

MICHELIN XD GRIP



BETTER GRIP, BIGGER BENEFITS





For Rigid Dump Trucks

UNSTOPPABLE GRIP CAPABILITIES

30% more lug edges[1] for unstoppable grip in muddy or loose conditions

AGGRESSION RESISTANCE FROM HIDDEN OBSTACLES[2]

New design with larger contact patch, extra protection and more tread volume

EXTRA LOAD, LIFE AND SPEED

10% more life[3], load[4] or speed[5] vs. the MICHELIN® X-TRACTION™ tire

TIRE SIZE: 27.00R49

[1] Compared to the MICHELIN® X-TRACTION™ tire in size 27.00R49 and based on internal measurement results. Actual results may vary.
[2] Compared to the MICHELIN® X-TRACTION™ tire. Actual results may vary.
[3] Compared to the MICHELIN® X-TRACTION™ tire in ** usage in size 27.00R49 and based on field test measurements and FARO-method measurements certified by the Michelin Center of Technology. Actual results may vary.
[4] Compared to the MICHELIN® X-TRACTION™ ** tire in size 27.00R49. (Source: 2017 MICHELIN® Technical Databook for Earthmover tires).
[5] Compared to the MICHELIN® X-TRACTION™ tire in size 27.00R49. Actual results may vary. (Source: 2017 MICHELIN® Technical Databook for Earthmover tires).

MICHELIN XD MINEWORKS



WORRY-FREE DEPENDABILITY



For 100-Ton Mining and Quarry Dump Trucks

NEW TREAD PATTERN AND DEPTH

Delivers even wear and minimal maintenance, specifically tire rotations

LESS PRESSURE

Reduces aggression damages and improves suspension and comfort

A NEW MARKET TIER

Competes in the Tier 2 market alongside Bridgestone, Continental, Goodyear and Yokohama

TIRE SIZE: 27.00R49

MICHELIN XHDT



INCREASE PRODUCTIVITY AND LOWER YOUR OPERATING COSTS





For Rigid Dump Trucks

THE TKPH WINNER

Increased productivity[1]

COMPOUND XHDT A

TKPH = 170 (23 KM/H MAX)

COMPOUND XHDT B

TKPH = 222 (30 KM/H MAX)

OPTIMIZED PERFORMANCE

Optimized tread pattern for ideal traction and evacuation

Enhanced tread depth of 47 mm for long life

Built-up sidewall for protection against sidewall penetrations

MICHELIN X-TRACTION



INCREASE UPTIME, REDUCE COSTS, EVEN WHEN IT'S WET!



For Rigid Dump Trucks

INCREASED TIRE LIFE

Thanks to 10% greater rubber volume on the ground to be used[1]

HIGH RESISTANCE TO AGGRESSION

Additional sidewall protection band increases sidewall impact resistance

EXCEPTIONAL TRACTION AND GRIP

An aggressive, non-directional, open, deep tread pattern. Massive, widely-spaced tread blocks. Excellent self-cleaning capabilities.

Up to 15% deeper tread pattern[2]

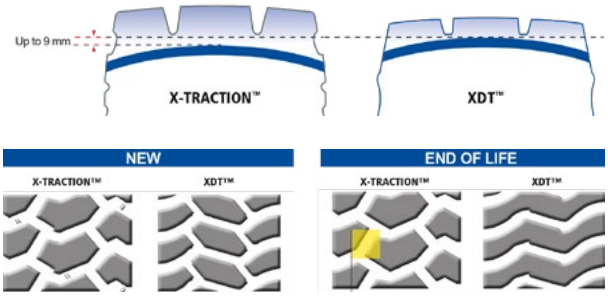

Worn out tire still keeping stable lug/void ratio.

[1] Internal comparison between the Michelin® X-Traction and the Michelin® XDT™, measurements certified by the Michelin® Center or technology, results may varies according to the tire dimensions.
[2] Internal comparison between the Michelin® X-Traction and the Michelin® XDT™, see Michelin Earthmover Databook 2019.

MICHELIN XTRA LOAD GRIP A4 & B COMPOUND*



SPEED OR LOAD, CHOOSE YOUR EFFICIENCY



For Rigid Dump Trucks

EXCELLENT GRIP[1,2] IN LOOSE GROUND CONDITIONS

CORROSION-PROOF CABLES

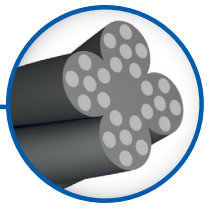

Steel encapsulated by rubber prevents corrosion spread, thus increasing aggression resistance.



BETTER LONGEVITY

Optimized contact patch with the ground

8-11% HIGHER PAY LOAD[3,4]

UP TO 34 KILOMETERS IN AN HOUR[5]

+5-8% WEAR LIFE[6,7]

TIRE SIZES: 18.00R33 A4 & B*[1,2,3,5,6], 24.00R35 A4 & B*[1,2,4,5,7], 21.00R33 A4 & B

[1] Due to 30% more lug edges in contact with the ground.
[2] Based on customer feedback done on: 140 tires (field tests) in 10 countries by 23 customers during 2016 and 2017.
[3] Compared to Bridgestone® VMTP tires, MICHELIN® XDT™ tires, and MICHELIN® X® TRACTION™ SC tires in size 18.00R33. Actual results may vary. (Sources: Bridgestone® 2018 OTR Data Book and MICHELIN® 2017 Data Book).
[4] Compared to the same size in Bridgestone® VMTP and VRLS - Source Bridgestone® OTR Databook 2016 and MICHELIN® XDT™ tire, MICHELIN® X-TRACTION™ SC tire – Source MICHELIN® Data Book 2017.
[5] Compared to MICHELIN® X® TRACTION™ SC and MICHELIN® XDT™ B compound tires. Actual results may vary.
[6] Compared to MICHELIN® XDT™ tires in size 18.00R33 and based on field test measurements and FARO-method measurements certified by the Michelin® Center of Technology. Actual results may vary.
[7] Compared to same size in MICHELIN® XDT™ tire, field test measurements certified by the Michelin® Center of Technology, from 2015 to 2017.
* Please refer to the Earthmover Tire compounds section on page 147.

MICHELIN XTRA LOAD PROTECT A4 & B COMPOUND*



EASY LIFE IN HARD CONDITIONS

For Rigid Dump Trucks

EXCELLENT PROTECTION IN HARD, SHARP GROUND CONDITIONS

8-11%
HIGHER PAY LOAD[1,2]

MORE DISTANCE IN AN HOUR[3]

+7-8%
WEAR LIFE[4,5]

CORROSION-PROOF CABLES

Steel encapsulated by rubber prevents corrosion spread, thus increasing aggression resistance.

TIRE SIZES: 18.00R33 A4 & B*[1,3,4], 24.00R35 A4 & B*[2,3,5], 21.00R33 A4 & B

[1] Compared to the Bridgestone® VMTP and VRLS tires and MICHELIN® X®QUARRY™ S tires in size 18.00R33. Actual results may vary. (Sources: Bridgestone® OTR 2018 Data Book and MICHELIN® 2017 Data Book.)
[2] Compared to the same size in Bridgestone® VMTP and VRLS - Source Bridgestone® OTR Databook 2016 and MICHELIN® X®QUARRY™ S – Source Michelin® Databook 2017
[3] Compared to MICHELIN® X®QUARRY™ S tires. Actual results may vary.
[4] Compared to MICHELIN® X®QUARRY™ S tires in size 18.00R33 and based on field tests measurements and FARO-method measurements certified by the Michelin® Center of Technology. Actual results may vary.
[5] Compared to the same size in MICHELIN® X®QUARRY™ S, field tests measurements certified by the Michelin® Center of Technology, from 2015 to 2017. "
*Please refer to the Earthmover Tire compounds section on page 147.

MICHELIN X SNOPLUS

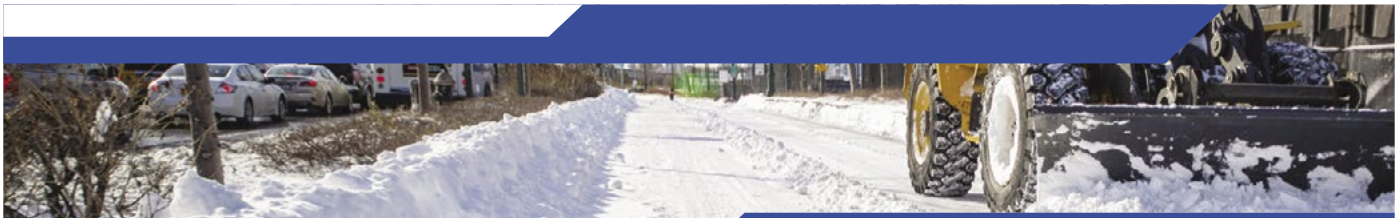

EXCEPTIONAL TRACTION ON SNOW AND ICE





For Loaders, Cranes and Graders



ALL-SEASON USE

The wide, non-directional tread design makes this ideal tire for year-round use

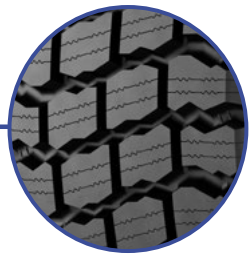



LOW OPERATING COST

Drastic reduction in downtime: the Michelin all-steel casing design has less flats than traditional bias-ply tires

Excellent wear life

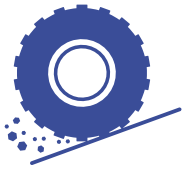

OUTSTANDING TRACTION ON SNOW AND ICE

The special rubber compound and aggressive lug design with added sipes provide maximum maneuverability in winter conditions and minimize the need for chains

MICHELIN XTLA



EXCEPTIONAL TRACTION AND STABILITY ON YIELDING TERRAIN



For Loaders and Graders

EXCEPTIONAL TRACTION

With an aggressive, non-directional tread pattern, the MICHELIN® XTLA™ tire offers a wide contact area and delivers exceptional traction in a broad variety of conditions

GOOD STABILITY

The summit is reinforced to offer stability on par with the MICHELIN® XHA 2® tire

DRASTIC DOWNTIME REDUCTION

The Michelin all-steel casing design has less flats than traditional bias-ply tires

The design of the shoulder/ sidewall intersection offers improved damage resistance

MICHELIN XHA 2



OPTIMIZE YOUR OPERATIONAL COST THANKS TO AN EXCEPTIONAL TIRE LIFE

For Loaders and Graders

DESIGNED TO BE RETREADED

Heat is the number one enemy of a tire. If your tire runs cooler it will last longer. The tire has been designed to limit tread movement and so limit the effects of heat to improve its retreadability.

MICHELIN® XHA 2® is up to 19%[1] cooler vs alternative producer 2

EXCELLENT LONGEVITY

+16% WEAR LIFE[1]

Wear resistant rubber compound

More rubber to be worn[2] XHA 2® :
+ 9.5% volume of tread rubber vs. alternative producer 1 and
+ 4.6% vs alternative producer 2

Optimized contact patch with the ground

BETTER AGGRESSION RESISTANCE[4]

The Michelin tire is engineered with an architecture designed to absorb impact, minimizing damage, allowing your tire to continue working

MICHELIN® XHA 2® has more sidewall puncture resistance than alternative producer 1

[1] Measurement certified by the Michelin Center of Technology, conducted at the Mining Testing Center in Almeria, Spain, in July 2016. Thermal measurements taken using a thermal imaging camera. Comparison of MICHELIN® XHA 2® 26.5 R 25 against Alternative producer 1 & 2 26.5 R 25. All tires followed the same protocols and configuration (temperature, track), same number of tires tested. Test organized using a CAT 966 M, at 15km/h with 12000kg of load, at 4 bars pressure.

[2] Test certified by Michelin Center of Technology, conducted at the Mining Testing Center in Almeria, Spain, in July 2016. Comparison of MICHELIN® XHA 2® against alternative producer 1, same size. All tires followed the same protocols and configuration, same number of tires tested. Test organized using a CAT 966 M, at 15 km/h, with 12000 kg of load, at 4 bars pressure.

[3] Compared to Premium competitors (alternative producer 1 & 2), field study in real life conditions made by Michelin for 5 years 2012-2017, on 170 tires in Eastern Europe, Western Europe, China and Asia South Pacific; same size (23.5 R 25 , 26.5 R 25 and 29.5 R 25) and same usage.

[4] Measurement certified by the Michelin Center of Technology, using XAO software, comparison of MICHELIN® 26.5 R 25 XHA 2® against alternative producer 1, same tire size. All tires followed the same protocols and configuration, same number of tires tested. Test organized using a CAT 966 M, at 15 km/h, with 12000 kg of load, at 4 bars pressure.

MICHELIN XLD 65



OPTIMIZE YOUR OPERATIONAL COST THANKS TO AN EXCEPTIONAL TIRE LIFE

For Loaders and Graders



HIGHER FOOTPRINT

Up to 49% more tread rubber[1] to protect your tire and insure its retreadability

Better traction on mixed soil



HIGHER AIR VOLUME

Better comfort for the operator with up to 10% or more shock absorption[2]

Better flotation in soft soils

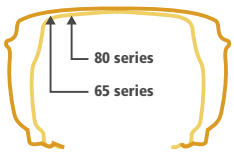

FITS ON A WIDER RIM

Same diameter as an 80 series tire +14% footprint surface and greater number of edges[2]

[1] Internal comparison between 875/65 R 29 XHA 2® and 29.5 R 25 XHA 2® +49% and +45% between a 775/65 R 29 XHA 2® and 26.5 R 25 XHA 2®, measurements certified by the Michelin® Center of Technology.
[2] Internal comparison between 875/65 R 29 XHA 2® and 29.5 R 25 XHA 2®, measurements certified by the Michelin® Center of Technology.

MICHELIN XLD D1



IMPROVE YOUR SURFACE LOADER PRODUCTIVITY AND SPEED IN DIFFICULT CONDITIONS



For Loaders, Dozers and Graders

EXCEPTIONAL GRIP

Open tread design provides mud evacuation. Angled lugs provide longitudinal adhesion for more efficient loading at the face.

WHICH TIRE MEETS YOUR SURFACE LOADER NEEDS?

*** EXTRA LOAD LOWER SPEEDS LESS THAN 10KPH	*/** LOAD & CARRY UP TO 14KPH
MICHELIN® XTXL®	MICHELIN® XLD® D1

TIRE SIZES: 26.5R25, 29.5R25, 35/65R33

EXCEPTIONAL TIRE LIFE

*/** load and carry up to 14 KPH

GREAT PROTECTION

Reinforced belt package and customized compound dedicated to aggressive conditions

MICHELIN XTXL



INCREASE YOUR PRODUCTIVITY THANKS TO BETTER TIRE LIFE AND LOAD CAPACITY

For Loaders and Underground Machines

For more detail regarding the tire usage in the Block Handing application, please refer to the section: "Help with the use of Earthmover tires."



COOLING SYSTEM

DESIGNED TO INCREASE TIRE LIFE BY UP TO 10%[1]

Large rubber volume distributed evenly over the whole sculpture

SIDEWALL PROTECTION

Reinforced sidewall, increases shock and abrasion resistance

UP TO 20% INCREASED RESISTANCE IN AGGRESSIVE CONDITIONS[1]

UP TO 20% INCREASED LOAD CAPACITY[1]

Allows greater inflation pressures and higher load capacity

Reinforced Steel Crown Belt Package for superior protection against punctures and impacts.

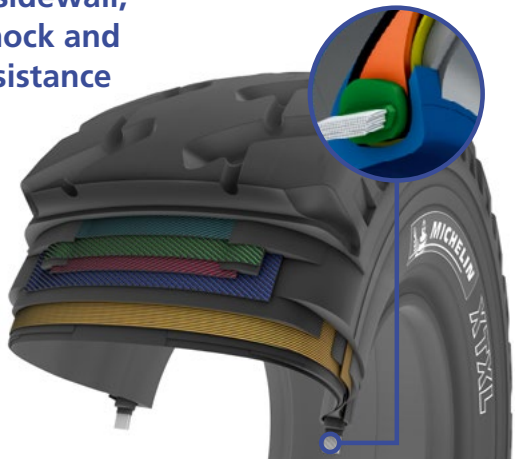

[1] Internal comparison between Michelin® XTXL and Michelin® XLD® D1 of the same dimension. See Michelin Earthmover databook 2019.

MICHELIN X MINE L4** 70/70 R 57



BOOSTING THE PRODUCTIVITY OF THE WORLD'S LARGEST WHEEL LOADER

For Loaders



IMPROVED MOBILITY & PRODUCTIVITY [1]

Delivers improved mobility and productivity thanks to three times the tramming speed of the competitor tire.[1]

EXCELLENT PROTECTION & WEAR RESISTANCE

The steel cables found in the MICHELIN X MINE radial tire provide a robust architecture, resulting in outstanding endurance under the harshest mining conditions.

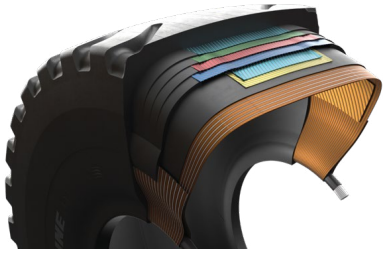

RADIAL CONSTRUCTION

The first radial tire constructed for the Komatsu WE2350/P&H L2350 large wheel loader.



[1] Based on the Firestone® Technical Bulletin reference number BATO-OTR-TB-002-160719, using Ambient 38° C and greater than (>) 5km tramming distance for the 70/70-57 Firestone® SRG DT LD L4 bias ply tire at 4 km/hr compared to the 70/70R57 MICHELIN® X MINE® L4 ** tire which demonstrated three times the tramming speed at 12 km/hr. Actual results may vary.

MICHELIN XLD D2



IMPROVE YOUR SURFACE LOADER PRODUCTIVITY AND SPEED IN DIFFICULT CONDITIONS

For Loaders, Dozers and Graders

INCREASE YOUR PRODUCTIVITY WITH OUTSTANDING TIRE WEAR AND THE BEST GRIP, PROTECTION FOR YOUR FACE-WORKING LOADERS

EXCEPTIONAL GRIP

Open tread design provides mud evacuation. Angled lugs provide longitudinal adhesion for more efficient loading at the face.

INCREASED LIFE

High tread depth 115 mm/144.9 32nd (L5) provides outstanding tire wear

GREAT PROTECTION

Reinforced belt package: Customized compound dedicated to aggressive conditions (compound A4)

TIRE SIZES: 45/65R39, 45/65R45

MICHELIN X TRA POWER L5



TAKES ON FACEWORK AT FULL POWER



For Loaders/Wheeldozers

MAXIMIZE POWER, MINIMIZE RIM SLIP

Redesigned bead optimizes transfer of torque

INCREASE LOAD-CARRYING CAPACITY[1]

Carry 16%[2] more load due to increased *** rating

GET MORE CROWN PROTECTION[2]

Designed with a reinforced steel crown belt package

ELIMINATE LUG CRACKING

Designed with new bridges and curved sculpture

[1] Increase in Load Carrying Capacity Requires Speed Reduction.
[2] Reference Michelin® Technical Earthmover Data Book 2019. Internal comparison between Michelin® XLD® D2 35/65R33 and Michelin® X® TRA POWER™ L5 35/65R33.

MICHELIN X MINE D2



RESISTANCE, TRACTION, ADHESION: NO COMPROMISE!



For Loaders, Skid-Steer Loaders,
Underground Haulers and Underground Loaders

RESISTANCE, TRACTION AND ADHESION

Optimized compound slows tire wear

IMPACT & CUT RESISTANT

Thanks to the optimized compound, the reinforced protection ply and the tread depth

ADHESION & TRACTION

The shoulder groove creates an optimized design for traction and evacuation, with a smooth central pattern for adhesion and protection

REINFORCED PROTECTION PLY

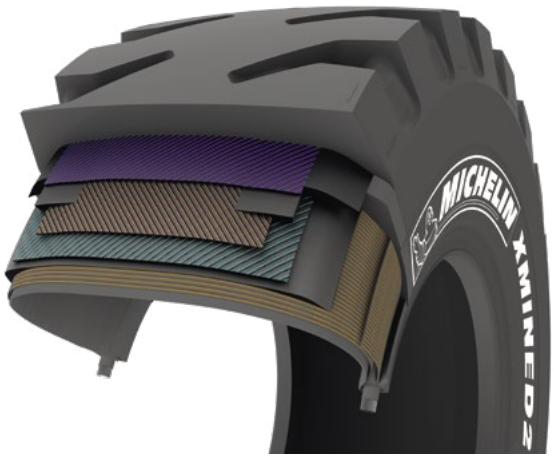

TIRE SIZES: 7.50R15, 8.25R15, 10.00R15, 350/65R15, 14.4R15, 400/80R15, 9.00R20, 12.00R20, 14.00R20, 450/70R20, 12.00R24, 15.5R25, 16.00R25, 17.5R25, 18.00R25, 20.5R25, 23.5R25, 26.5R25, 29.5R25, 35/65R33

MICHELIN X MINE D2 L5 HR



EXCELLENT PRODUCTIVITY IN HARD LOADING CONDITIONS

For Loaders, Skid-Steer Loaders,
Underground Haulers and Underground Loaders

OPTIMIZED COMPOUND

Built to withstand hard conditions and to slow tire wear

IMPACT & CUT RESISTANT

Due to the optimized compound, the tread design and the resilient casing

A RESILIENT CASING

Reinforced protection ply with several steel belts creates a tire that resists punctures

TIRE SIZES: 55/80R57, 60/80R57

[1] According to tire dimensions.

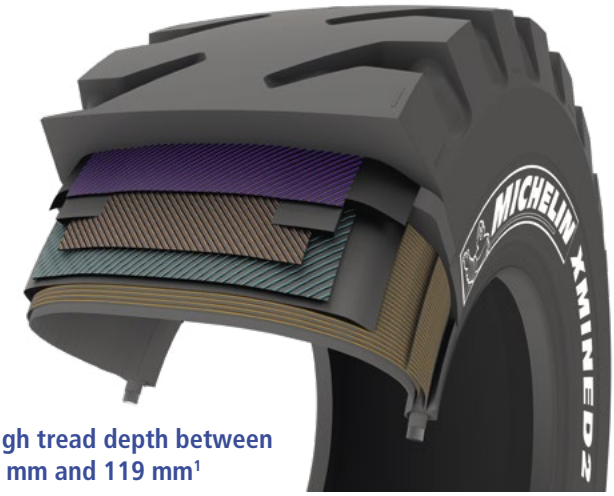

A high tread depth between 118 mm and 119 mm[1]

MICHELIN X MINE D2 L5 SR



EXCELLENT PRODUCTIVITY IN STANDARD LOADING CONDITIONS

For Loaders, Skid-Steer Loaders, Underground Haulers and Underground Loaders



OPTIMIZED COMPOUND

Built to withstand standard conditions and to slow tire wear

IMPACT & CUT RESISTANT

Due to the optimized compound, the tread design and the resilient casing

A RESILIENT CASING

Reinforced protection ply with steel belts constitute a tire that resists to punctures

TIRE SIZES: 50/65R51, 55/80R57, 60/80R57

[1]According to tire dimensions.

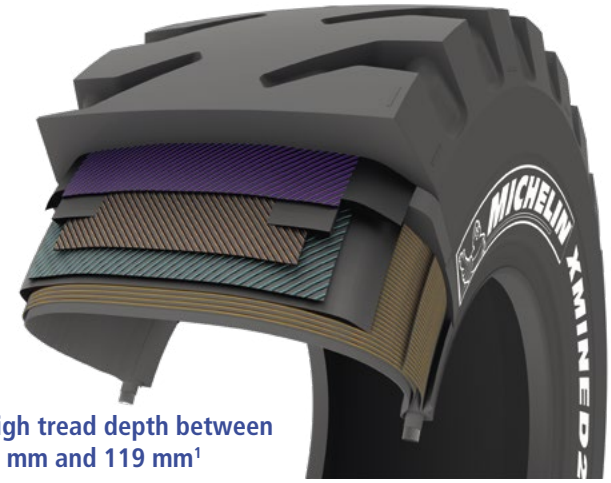

A high tread depth between 116 mm and 119 mm[1]

MICHELIN X MINE D2 LC



MOVE LONGER, MOVE FASTER

For Loaders, Skid-Steer Loaders, Underground Haulers and Underground Loaders

6 KM DISTANCE PER HOUR

The new MICHELIN® X MINE® D2 LC tire's compound reduces the temperature of the tire in order to move longer and faster.

ROBUST TREAD DESIGN

RESISTANCE TO SHOCK RUPTURES, CUTS AND TREAD TEARING

Thanks to a substantial crown, reinforced shoulders and a protection band

INCREASE YOUR PRODUCTIVITY



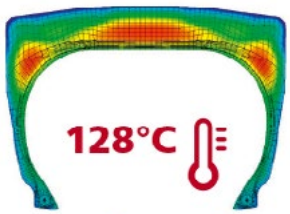

MICHELIN® X MINE® D2 SR
at 10 km distance per hour

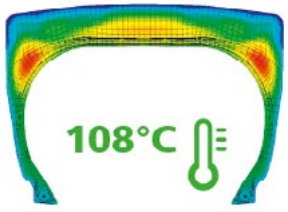

MICHELIN® X MINE® D2 LC
at 10 km distance per hour

TIRE SIZES: 50/65R51

MICHELIN X MINE D2 L5



EXCELLENT PRODUCTIVITY IN AGGRESSIVE LOADING CONDITIONS



For Loaders, Skid-Steer Loaders, Underground Haulers and Underground Loaders

OPTIMIZED COMPOUND

Built to withstand hard conditions and to slow tire wear

IMPACT & CUT RESISTANT

Thanks to the optimized compound, the tread design and the resilient casing

A RESILIENT CASING

Reinforced protection ply with several specific steel belts constitute a tire that is very resistant to punctures

TIRE SIZES: 45/65R39, 45/65R45

[1] According to tire dimensions

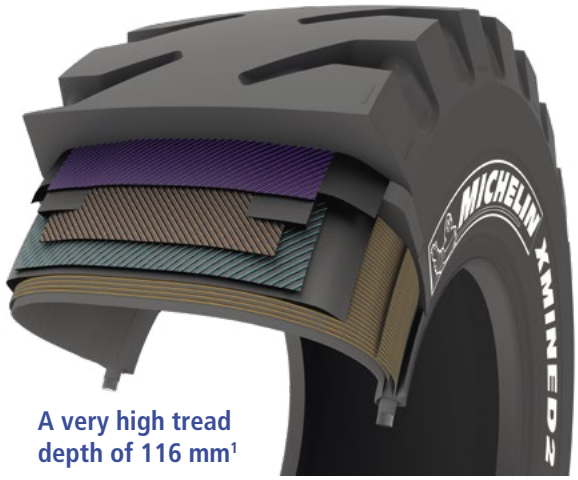

A very high tread depth of 116 mm[1]

MICHELIN X MINE D2 EXTRA LOAD



MORE LOAD[1], A TOUGHER TIRE[2]

For Quarry and Underground



EXTRA LOAD-CARRYING CAPACITY

(***TRA Load Range)
New bead area and stronger, more robust architecture increases load capacity by up to 16%[1]

IMPROVED TIRE LIFE

When used at ** load, MICHELIN X Mine D2 Extra Load has improved aggression resistance[2], which results in more tire life

INCREASED SIDEWALL PROTECTION[2]

An innovative technology constituted by extra plies in the sidewall prevent rocks from penetrating the sidewall

[1] The new MICHELIN® 35/65R33 X MINE® D2 EXTRA LOAD *** tires increase the load capacity by 16% from 28,000kg to 32,500kg.(1)
(1) Based on comparisons of the MICHELIN X MINE® D2 ** (2019 Michelin Data Book).
[2] The new MICHELIN® 35/65R33 X MINE® D2 EXTRA LOAD *** tires improve aggression resistance due to new cables and NRF technology (reinforced sidewall plies).(1)
(1) Compared to MICHELIN X MINE® D2 ** tires. Actual results may vary.

MICHELIN XGLA2



MAXIMIZE YOUR GRADER TRACTION

For Graders

EXCELLENT PRODUCTIVITY

Resistance to impacts and cuts resulting in less downtime

EXCELLENT TRACTION AND SIDE HILL GRIP

An aggressive tread pattern, formed from many non-directional blocks, provides a high traction capability on unstable and muddy soils

An important contribution of the tread pattern to avoid lateral slip

LOW OPERATING COST

Easy to repair

Long-lasting, even-wearing tread pattern and durable with low rolling resistance for efficient fuel economy

MICHELIN X UM HAUL



PRODUCTIVITY UNDER HEAVY HAULS



For Underground Haulers

THE MOST PRODUCTIVE TIRE ON THE MARKET[1,2]

High load-carrying capacity and speed make it the most productive tire of its size on the market, with up to 360 TKPH

HANDLES HEAVY LOADS

Designed with new, bigger cables and innovative 6-ply architecture that let trucks get 8.6% more[3] load capacity to carry up to 31.5 tons at 7 bar



GAIN MORE DISTANCE IN AN HOUR

Cooler rubber compounds allow trucks to maintain an average max distance of 14 km/hr[4] while carrying more

SUPERIOR ADHESION[5] FOR BETTER GRIP

Center groove increases grip, and innovative tread pattern conquers underground mining operations

[1] The new MICHELIN® 35/65R33 X® UM HAUL tire is the MOST PRODUCTIVE Underground TIRE ON THE MARKET for trucks greater than 60 tons of payload, with up to 360 TKPH.
[2] Based on comparisons to the 2021 Bridgestone Databook and the 2020 Goodyear Databook. Actual results may vary.
[3] The new MICHELIN® 35/65R33 X® UM HAUL tire gets 8.6% more load capacity, to carry up to 31.5 tons at 7 BAR due to new cables, architecture and larger tire.
[4] The new MICHELIN® 35/65R33 X® UM HAUL tire was designed to get 14 KM MAX DISTANCE PER HOUR thanks to a larger tire and cooler compound.
[5] The new MICHELIN® 35/65R33 X® UM HAUL tire was designed for EXCELLENT ADHESION thanks to a new innovative tread pattern that increases grip.

MICHELIN X MINE D2 PRO



IMPROVED AGGRESSION RESISTANCE AND REDUCTION IN DOWNTIME IN THE MOST EXTREME CONDITIONS



For Loaders, Skid-Steer Loaders,
Underground Haulers and Underground Loaders



New cables in the working plies resist aggression and protect against oxidation.

EXTREME CONDITIONS DEMAND TOUGH TIRES

UP TO 18% INCREASED LOAD CAPACITY[1]

IMPROVED AGGRESSION RESISTANCE[2]

Due to new cables and NRF technology

IMPROVED TIRE LIFE[3]

In harsh conditions thanks to optimized tread compounds



Two extra plies added to tire construction which contain crossed nylon cords encased in rubber for greater resistance and toughness

TIRE SIZES: 17.5R25, 18.00R25, 20.5R25, 23.5R25, 26.5R25, 29.5R25, 29.5R29

[1] Based on comparisons of the MICHELIN® XSM® D2+ PRO and X MINE® D2 PRO to the MICHELIN® XSM® D2+ and MICHELIN® X MINE® D2, as set forth in the 2018 Michelin Data Book. Actual results may vary.
[2] Based on computer modeling comparisons of the MICHELIN® XSM® D2 + PRO and X MINE® D2 PRO tires compared to MICHELIN® XSM® D2+ and MICHELIN X MINE® D2 tires. Actual results may vary.
[3] Based upon improved aggression resistance and on computer modeling comparing the tread compounds included in the MICHELIN® XSM® D2+ PRO to the MICHELIN® XSM® D2+. Actual results may vary.

MICHELIN XSM D2+LC



MOVE FASTER, MOVE LONGER

For Loaders, Underground Loaders and Forklifts





DESIGNED TO INCREASE YOUR SPEED UP TO +50% DISTANCE PER HOUR[1]

6 KM DISTANCE PER HOUR

SPEED INCREASE

Move faster and get up to +50% of distance per hour[1]

SPECIAL CUT-RESISTANT RUBBER COMPOUNDS

Protection and aggression resistance for most highly abrasive and severe mining conditions

EXCEPTIONAL PROTECTION

Special cut-resistant rubber compounds

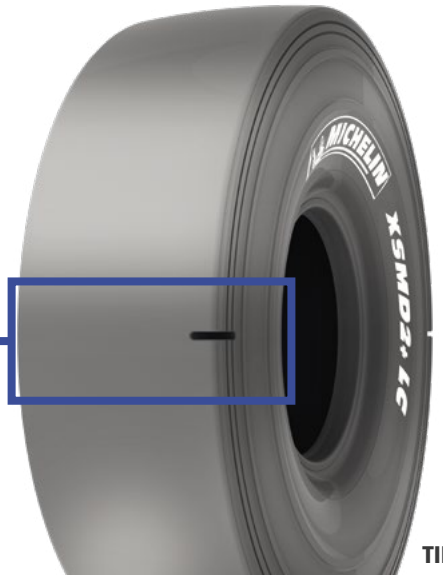

TIRE SIZES: 18.00R25

[1] Internal comparaison between the MICHELIN® XSM® D2 + LC and the MICHELIN® XSM® D2 + PRO, see the Michelin Earthmover Databook 2019.

MICHELIN XSM D2+



THE UNDERGROUND MINING LOADER TIRE FOR EXTREME CONDITIONS

For Loaders, Underground Loaders and Forklifts





SMOOTH, DEEP TREAD OF 78 MM

REDUCE YOUR DOWNTIME AND YOUR MAINTENANCE COSTS IN THE MOST EXTREME CONDITIONS

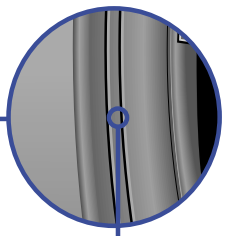

PROTECTED CASING

Resists damage from impacts and penetration

ROBUST SHOULDERS WITH SIDEWALL PROTECTION



EXCELLENT ADHESION

The smooth tread design gives an excellent level of adhesion in the most difficult conditions of use

TIRE SIZES: 12.00R24, 14.00R24, 17.5R25, 18.00R25, 26.5R25, 35/65R33

MICHELIN XSM D2+ PRO



EXTREME CONDITIONS DEMAND TOUGH TIRES



For Loaders, Underground Loaders

INCREASE LOAD CAPACITY BY UP TO 18%[1]

IMPROVED AGGRESSION RESISTANCE[2]

Due to new cables and NRF technology (reinforced sidewall plies)[2]

NRF TECHNOLOGY

Reinforced sidewall plies



IMPROVED TIRE LIFE[3]

In the harshest of conditions thanks to optimized tread compounds[3]

TIRE SIZES: 17.5R25, 18.00R25, 26.5R25, 29.5R29

[1] Based on comparisons of the MICHELIN® XSM® D2+ PRO and X MINE® D2 PRO to the MICHELIN® XSM® D2+ and MICHELIN® X MINE® D2, as set forth in the 2018 Michelin Data Book. Actual results may vary.
[2] Based on computer modeling comparisons of the MICHELIN® XSM® D2 + PRO and X MINE® D2 PRO tires compared to MICHELIN® XSM® D2+ and MICHELIN X MINE® D2 tires. Actual results may vary.
[3] Based upon improved aggression resistance and on computer modeling comparing the tread compounds included in the MICHELIN® XSM® D2+ PRO to the MICHELIN® XSM® D2+. Actual results may vary.

MICHELIN XADN+ A & B4 COMPOUND*



OPTIMIZE YOUR OPERATIONAL COST THANKS TO AN EXCEPTIONAL TIRE LIFE



Multi-block tread pattern with shoulder made of alternating and multi-edged blocks

Summit designed to resist stresses when cornering

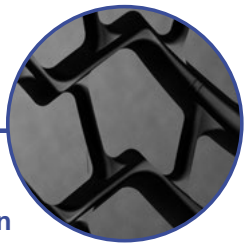

Excellent lateral grip on soft terrain due to self-cleaning tread pattern

For Articulated Dump Trucks and Scrapers

+11% WEAR LIFE[1]

The MICHELIN XADN+ lasts up to 11%[1] on average more hours compared to premium competitors

The B4 compound will improved the tread wear resistance on abrasive soil

EXCELLENT TRACTION

Maneuverability on soft or muddy soil with proven flotation and traction

GOOD LONG-TERM INVESTMENT

Up to 81% of Michelin tires are retreadable due to Michelin's casing quality[3]

EXCELLENT TREAD WEAR RESISTANCE THANKS TO NEW RUBBER COMPOUND[2]

[1] Compared to premium competitors field study in real life conditions made by Michelin for 9 years 2008-2017, on 114 tires in Africa, India, Middle-East, Australia, Asia South Pacific and Europe ; same size (23.5 R 25, 26.5 R 25 and 29.5 R 25) and same usage.
[2] See the 2019 MICHELIN technical databook Earthmover Tires. Reference value got with A-type rubber compound. Possibility of extension based on the need to be validated through specific study, please consult your local Michelin Technical Representative.
[3] Measurement on retreadable capability made by Pneus Laurent over 2 years (2015-2017), on 578 Michelin tires on the same dimension (26.5 R 25) in Europe.
*Please refer to the Earthmover Tire compounds section on page 147.

MICHELIN XAD 65



TAILORED FOR YOUR BOTTOM LINE IN ANY WORKING CONDITIONS



Multi-block tread pattern

Larger footprint with lower ground contact pressure, better stability, excellent mobility

Excellent lateral grip on soft terrain due to self-cleaning tread pattern

For Articulated Dump Trucks

HIGHER FOOTPRINT

More tread rubber[2] to protect your tire and insure its retreadability

Better traction on mixed soils

+26% footprint surface[2]

HIGHER AIR[2] VOLUME

Better comfort for the operator with up to 10% or more shock absorption[2]

Better flotation in soft soils

HIGHER LOAD CAPACITY

Up to 1600kg/3527 lbs at a lower pressure[1]

[1] Internal comparison between 875/65 R 29 XAD65 and 29.5 R 25 XADN+, measurements certified by the Michelin® Center of Technology.
[2] Internal comparison between 1376/363.5 (Liter/Gallon) of the 875/65 R 29 XAD65 and 1221/322.6 (Liter/Gallon) of the 29.5 R 25 XADN+, measurement certified by Michelin® Center of Technology.

MICHELIN XTRA DEFEND



BUILT TO RESIST

For Articulated Dump Trucks



OUTSTANDING TIRE LIFE AND EXCEPTIONAL RESISTANCE TO AGGRESSION

EXCELLENT TIRE LIFE[1]

Deeper tread pattern and more rubber to be worn[1]

BETTER AGGRESSION RESISTANCE[1,2]

Protective shield on the crown and sidewalls and more mass metal on the summit

EXCELLENT TKPH

TKPH

TIRE SIZES: 750/65R25, 875/65R29, 23.5R2, 26.5R25, 29.5R25, 33.25R29

[1] Internal comparison with MICHELIN® X®AD 65, same sizes
[2] Internal comparison with MICHELIN® X®-SUPER TERRAIN™+, see Michelin® Earthmover Data Book 2023.

MICHELIN XS SAND

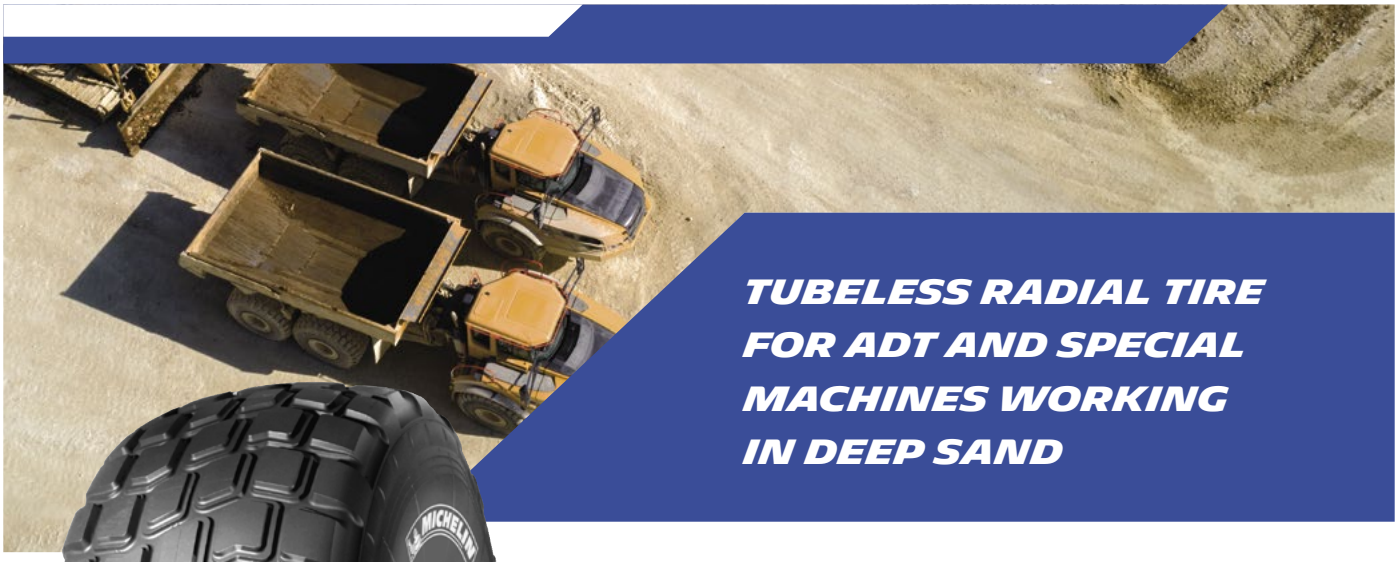

TUBELESS RADIAL TIRE FOR ADT AND SPECIAL MACHINES WORKING IN DEEP SAND



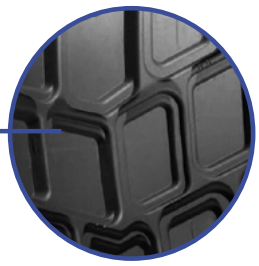

For Articulated Dump Trucks

HIGH LEVEL OF MOBILITY

Wide tread

Greater ground contact area

Multi-facet tread pattern with staggered tread blocks

HIGH PRODUCTIVITY

Strong, flexible radial casing

Heavy loads at low inflation pressures

Optimized sidewall

Resistance to hot climatic conditions and ultra violet light

FLOTATION

Wide tread band and large air volume

Optimized distribution of ground pressure constraints

Low ground contact pressure

MICHELIN XTS



FOR MEDIUM POWERED SCRAPERS IN APPLICATIONS REQUIRING MAXIMUM TRACTION



For Articulated Dump Trucks and Scrapers



IMPROVED DURABILITY

BETTER RESISTANCE TO DAMAGE AND ABRASION

Square shoulders and protective sidewall bands

EXTENDED LIFE

IMPROVED WEAR RATE

Extra deep tread composed of special new rubber compounds

INCREASED TRACTION AND ADHESION

SELF CLEANING TREAD PATTERN

Open tread design with widely spaced tread blocks

MICHELIN XMS



E3 RADIAL TIRE FOR LARGE SCRAPERS DELIVERS EXCELLENT TRACTION, SUPERIOR DAMAGE RESISTANCE & A SMOOTH RIDE





For Scrapers



MAXIMUM RESISTANCE

The square tread contour protects shoulders and sidewalls from damage



EXCELLENT LATERAL GRIP

The edges of the circumferential tread pattern offer exceptional lateral grip



OPTIMAL COMFORT

Staggered tread blocks provide excellent operator comfort



EXTENDED TIRE LIFE

The innovative tread design has a high lug-to-void ratio

MICHELIN XRS



THE NON-DIRECTIONAL E4R TIRE FOR HIGH POWERED SCRAPERS IN HARSH WORKING CONDITIONS



For Scrapers

LONGEVITY

A THICK, TOUGH TREAD

Additional volume of tread rubber available for wear

PRODUCTIVITY

Deep open tread pattern with staggered blocks

DAMAGE RESISTANCE

Better protection against cuts and side wall damage

MICHELIN X-CRANE + (M+S)



LIFTING YOUR PRODUCTIVITY TO NEW HEIGHTS



For Cranes

LOWER OPERATING COSTS

Wear life increased by up to 20%[1] thanks to a new, more resistant rubber compound in the tread

GREATER OPERATOR COMFORT AND RELIABILITY

Improvement in irregular wear patterns so that the crane generates fewer vibrations thanks to a more rigid rubber compound in the tread

Increased reliability due to better resistance of the cables, the C2 Technology and a longer-lasting bead area

LESS WASTE

More environmentally friendly because tires can be regrooved

[1] Internal comparison between the MICHELIN® X-CRANE® + and the MICHELIN® X-CRANE® or XGC® depending of the dimension, measurements certified by the Michelin® Center of Technology.

MICHELIN XGC



HIGH SPEED RADIAL TIRE FOR MOBILE CRANES AND SPECIAL MACHINES

For Mobile Cranes and Special Machines

HEAT RESISTANCE

Reinforced sidewalls with bridging rubber between tread blocks

COMFORT

Reinforced sidewalls

Non-directional tread with bridging rubber between tread blocks

EXCELLENT LIFE

Versatile tread with independent tread blocks

Regroovable

MICHELIN XMH S



E2S RADIAL TIRE, FOR LONG DISTANCE TRANSPORT AT HIGH SPEEDS



Special Vehicles

MORE PRODUCTIVITY[1]

Optimized crown structure

Rubber compound & design allowing long distance with a high wear resistance

Massive tread

"Land to sea" ratio increased

Improved wear form (tread blocks) design

MORE COMFORT & TRACTION[1]

Tread pattern with offset blocks and progressive contact ground

MORE SAFETY FEATURES[1]

Heavily blocked tread pattern with longitudinal & lateral grooves

[1] Internal comparison between the MICHELIN® XMP 170 E and the MICHELIN® XMH S of the same dimension, measurements certified by the Michelin® Center of Technology.

MICHELIN X LISSE COMPACTEUR



A SLICK RADIAL TIRE FOR COMPACTORS



Robust tread and shoulders give more resistance to cuts and perforations

MICHELIN® Radial structure improves tire life

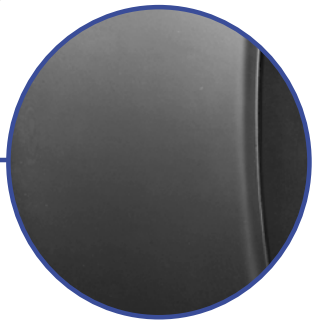

No traces left because of the smooth tread pattern and rounded shoulders

For Compactor

EXCELLENT FINISHING

Even contact pressure throughout the contact area because of the Radial construction

REDUCTION IN MACHINE DOWNTIME

The specialized design of the crown gives excellent resistance to heat

REDUCTION IN OPERATING COST

Wear indicators in the tire tread facilitate tread wear assessment



MICHELIN TECHNICAL DATA

EARTHMOVER TIRES

TIRE CHARACTERISTICS

15"	PAGE 63
20"	PAGE 65
20.5"	PAGE 67
21"	PAGE 67
24"	PAGE 68
25"	PAGE 72
29"	PAGE 97
33"	PAGE 101
35"	PAGE 108
39"	PAGE 111
45"	PAGE 112
49"	PAGE 112
51"	PAGE 116
57"	PAGE 118
63"	PAGE 124

TIRE LOAD IN KG/LB – TIRE PRESSURE IN BAR/PSI

15"

COMMERCIAL DESCRIPTION	CAI *MSPN*	Max. dist./ hour **km** *mile*	TKPH [1] *TMPH*	e **mm** *inch*	D **mm** *inch*	R' **mm** *inch*	RC **mm** *inch*	Tread depth **mm** *32rd*	Dual Spacing **mm** *inch*	Cap. **liter** *gallon*	Measuring [2] [3] Recommended Rim	Other Approved [2] [3] Rims
X LISSE COMPACTEUR C1 7.50 R 15 Tube Type	**123461** *12568*			**198** *7.8*	**770** *30.3*	**338** *13.3*	**2324** *91.5*	**9** *11.3*		**40** *10.6*	**6.0**	5.5 6.00S 6.5 B6.5

Bar *Psi*	**3** *44*	**3.5** *51*	**3.75** *54*	**4** *58*	**4.5** *65*	**5** *73*	**5.5** *80*	**6** *87*	**7** *102*	**8** *116*
Machine - Use (**kg** - *lbs*)	**COMPACTORS**									
10 KM/H *6 MPH*	**1250** *2756*	**1400** *3087*	**1470** *3241*	**1540** *3396*	**1680** *3704*	**1830** *4035*	**1970** *4344*	**2120** *4675*	**2420** *5336*	**2725** *6009*
15 KM/H *9 MPH*	**1020** *2249*	**1135** *2503*	**1190** *2624*	**1250** *2756*	**1375** *3032*	**1500** *3308*	**1600** *3528*	**1700** *3749*	**1980** *4366*	**2180** *4807*

COMMERCIAL DESCRIPTION	CAI *MSPN*	Max. dist./ hour **km** *mile*	TKPH [1] *TMPH*	e **mm** *inch*	D **mm** *inch*	R' **mm** *inch*	RC **mm** *inch*	Tread depth **mm** *32rd*	Dual Spacing **mm** *inch*	Cap. **liter** *gallon*	Measuring [2] [3] Recommended Rim	Other Approved [2] [3] Rims
XMINE D2 L5 7.50 R 15 Tube Type	**123342** *23416*	**6** *3.7*		**230** *9.1*	**840** *33.1*	**385** *15.2*	**2551** *100.4*	**46** *58*		**39** *10.3*	**6.0**	5.5 6.00S 6.5 B6.5

Bar *Psi*	**3** *44*	**3.5** *51*	**3.75** *54*	**4** *58*	**4.5** *65*	**5** *73*	**5.5** *80*	**6** *87*	**7** *102*	**8** *116*
Machine - Use (**kg** - *lbs*)	**LOADERS**									
FRONT LADEN	**1850** *4079*	**2000** *4410*	**2075** *4575*	**2150** *4741*	**2250** *4961*	**2400** *5292*	**2500** *5513*	**2650** *5843*	**2900** *6395*	**3150** *6946*
REAR UNLADEN	**1475** *3252*	**1600** *3528*	**1650** *3638*	**1725** *3804*	**1800** *3969*	**1925** *4245*	**2000** *4410*	**2125** *4686*	**2325** *5127*	**2525** *5568*
Machine - Use (**kg** - *lbs*)	**UNDERGROUND MINE MACHINES**									
ALL AXLES	**1675** *3693*	**1800** *3969*	**1875** *4134*	**1925** *4245*	**2025** *4465*	**2150** *4741*	**2250** *4961*	**2375** *5237*	**2600** *5733*	**2825** *6229*

COMMERCIAL DESCRIPTION	CAI *MSPN*	Max. dist./ hour **km** *mile*	TKPH [1] *TMPH*	e **mm** *inch*	D **mm** *inch*	R' **mm** *inch*	RC **mm** *inch*	Tread depth **mm** *32rd*	Dual Spacing **mm** *inch*	Cap. **liter** *gallon*	Measuring [2] [3] Recommended Rim	Other Approved [2] [3] Rims
XMINE D2 L5 8.25 R 15 Tube Type	**123352** *22154*	**6** *3.7*		**250** *9.8*	**882** *34.7*	**402** *15.8*	**2680** *105.5*	**48** *60.5*		**47** *12.4*	**6.5**	6.0 7.0 B6.5

Bar *Psi*	**3** *44*	**3.5** *51*	**3.75** *54*	**4** *58*	**4.5** *65*	**5** *73*	**5.5** *80*	**6** *87*	**7** *102*	**8** *116*
Machine - Use (**kg** - *lbs*)	**LOADERS**									
FRONT LADEN	**2000** *4410*	**2200** *4851*	**2300** *5072*	**2400** *5292*	**2550** *5623*	**2700** *5954*	**2850** *6284*	**3000** *6615*	**3300** *7277*	**3600** *7938*
REAR UNLADEN	**1600** *3528*	**1750** *3859*	**1850** *4079*	**1925** *4245*	**2050** *4520*	**2150** *4741*	**2275** *5016*	**2400** *5292*	**2650** *5843*	**2875** *6339*
Machine - Use (**kg** - *lbs*)	**UNDERGROUND MINE MACHINES**									
ALL AXLES	**1800** *3969*	**1975** *4355*	**2075** *4575*	**2150** *4741*	**2300** *5072*	**2425** *5347*	**2575** *5678*	**2700** *5954*	**2975** *6560*	**3250** *7166*

COMMERCIAL DESCRIPTION	CAI *MSPN*	Max. dist./ hour **km** *mile*	TKPH [1] *TMPH*	e **mm** *inch*	D **mm** *inch*	R' **mm** *inch*	RC **mm** *inch*	Tread depth **mm** *32rd*	Dual Spacing **mm** *inch*	Cap. **liter** *gallon*	Measuring [2] [3] Recommended Rim	Other Approved [2] [3] Rims
XMINE D2 L5 10.00 R 15 Tube Type	**123372** *18686*	**6** *3.7*		**295** *11.6*	**910** *35.8*	**411** *16.2*	**2748** *108.2*	**48** *60.5*		**70** *18.5*	**7.5**	7.0

Bar *Psi*	**3** *44*	**3.5** *51*	**4** *58*	**4.5** *65*	**5** *73*	**5.5** *80*	**6** *87*	**6.5** *94*	**7** *102*	**8** *116*
Machine - Use (**kg** - *lbs*)	**LOADERS**									
FRONT LADEN	**2400** *5292*	**2600** *5733*	**2800** *6174*	**3000** *6615*	**3200** *7056*	**3350** *7387*	**3500** *7718*	**3700** *8159*	**3900** *8600*	**4300** *9482*
REAR UNLADEN	**1925** *4245*	**2075** *4575*	**2250** *4961*	**2400** *5292*	**2550** *5623*	**2675** *5898*	**2800** *6174*	**2965** *6538*	**3125** *6891*	**3450** *7607*
Machine - Use (**kg** - *lbs*)	**UNDERGROUND MINE MACHINES**									
ALL AXLES	**2150** *4741*	**2350** *5182*	**2525** *5568*	**2700** *5954*	**2875** *6339*	**3025** *6670*	**3150** *6946*	**3325** *7332*	**3500** *7718*	**3875** *8544*

TIRE LOAD IN KG/LB – TIRE PRESSURE IN BAR/PSI

COMMERCIAL DESCRIPTION	CAI *MSPN*	Max. dist./ hour **km** *mile*	TKPH [1] *TMPH*	e **mm** *inch*	D **mm** *inch*	R' **mm** *inch*	RC **mm** *inch*	Tread depth **mm** *32rd*	Dual Spacing **mm** *inch*	Cap. **liter** *gallon*	Measuring [2] [3] Recommended Rim	Other Approved [2] [3] Rims
XMINE D2 L5 350/65 R 15 (32x14.5 R 15) Tubeless	**826683** *85701*	**6** *3.7*		**348** *13.7*	**844** *33.2*	**379** *14.9*	**2543** *100.1*	**36** *45.4*		**91** *24*	**11.50**	10.50
Bar *Psi*	**3** *44*	**3.5** *51*		**3.75** *54*	**4** *58*	**4.5** *65*	**5** *73*	**5.5** *80*	**6** *87*	**7** *102*	**8** *116*	
Machine - Use (**kg** - *lbs*)	**LOADERS**											
FRONT LADEN	**2400** *5292*	**2660** *5865*		**2790** *6152*	**2920** *6439*	**3150** *6946*	**3400** *7497*	**3570** *7872*	**3750** *8269*	**4200** *9261*	**4600** *10143*	
REAR UNLADEN	**1920** *4234*	**2128** *4692*		**2232** *4922*	**2336** *5151*	**2520** *5557*	**2720** *5998*	**2856** *6297*	**3000** *6615*	**3360** *7409*	**3680** *8114*	
Machine - Use (**kg** - *lbs*)	**UNDERGROUND MINE MACHINES**											
ALL AXLES	**2160** *4763*	**2394** *5279*		**2511** *5537*	**2628** *5795*	**2835** *6251*	**3060** *6747*	**3213** *7085*	**3375** *7442*	**3780** *8335*	**4140** *9129*	

COMMERCIAL DESCRIPTION	CAI *MSPN*	Max. dist./ hour **km** *mile*	TKPH [1] *TMPH*	e **mm** *inch*	D **mm** *inch*	R' **mm** *inch*	RC **mm** *inch*	Tread depth **mm** *32rd*	Dual Spacing **mm** *inch*	Cap. **liter** *gallon*	Measuring [2] [3] Recommended Rim	Other Approved [2] [3] Rims
XMINE D2 L5 14.5 R 15 Tubeless	**123101** *41368*	**6** *3.7*		**380** *15*	**894** *35.2*	**408** *16.1*	**2711** *106.7*	**48** *60.5*		**90** *23.8*	**10.50**	11.0 11.00BD 11.50
Bar *Psi*	**3** *44*	**3.5** *51*		**3.75** *54*	**4** *58*	**4.5** *65*	**5** *73*	**5.5** *80*	**6** *87*	**7** *102*	**8** *116*	
Machine - Use (**kg** - *lbs*)	**LOADERS**											
FRONT LADEN	**2550** *5623*	**2850** *6284*		**2975** *6560*	**3100** *6836*	**3350** *7387*	**3600** *7938*	**3850** *8489*	**4100** *9041*	**4600** *10143*	**5100** *11246*	
REAR UNLADEN	**2050** *4520*	**2275** *5016*		**2375** *5237*	**2475** *5457*	**2675** *5898*	**2875** *6339*	**3075** *6780*	**3275** *7221*	**3675** *8103*	**4075** *8985*	
Machine - Use (**kg** - *lbs*)	**UNDERGROUND MINE MACHINES**											
ALL AXLES	**2300** *5072*	**2575** *5678*		**2675** *5898*	**2800** *6174*	**3025** *6670*	**3250** *7166*	**3475** *7662*	**3700** *8159*	**4150** *9151*	**4600** *10143*	

COMMERCIAL DESCRIPTION	CAI *MSPN*	Max. dist./ hour **km** *mile*	TKPH [1] *TMPH*	e **mm** *inch*	D **mm** *inch*	R' **mm** *inch*	RC **mm** *inch*	Tread depth **mm** *32rd*	Dual Spacing **mm** *inch*	Cap. **liter** *gallon*	Measuring [2] [3] Recommended Rim	Other Approved [2] [3] Rims
XMINE D2 L5 400/80 R 15 (38x16 R 15) Tubeless	**735466** *41318*	**6** *3.7*		**385** *15.2*	**996** *39.2*	**445** *17.5*	**2996** *118*	**34** *42.8*		**128** *33.8*	**11.50**	
Bar *Psi*	**3** *44*	**3.5** *51*		**3.75** *54*	**4** *58*	**4.5** *65*	**5** *73*	**5.5** *80*	**6** *87*	**7** *102*	**8** *116*	
Machine - Use (**kg** - *lbs*)	**LOADERS**											
FRONT LADEN	**3300** *7277*	**3650** *8048*		**3825** *8434*	**4000** *8820*	**4350** *9592*	**4700** *10364*	**5050** *11135*	**5400** *11907*	**6100** *13451*	**6600** *14553*	
REAR UNLADEN	**2650** *5843*	**2925** *6450*		**3050** *6725*	**3200** *7056*	**3475** *7662*	**3750** *8269*	**4050** *8930*	**4325** *9537*	**4875** *10749*	**5275** *11631*	
Machine - Use (**kg** - *lbs*)	**UNDERGROUND MINE MACHINES**											
ALL AXLES	**2975** *6560*	**3275** *7221*		**3450** *7607*	**3600** *7938*	**3900** *8600*	**4225** *9316*	**4550** *10033*	**4850** *10694*	**5500** *12128*	**5950** *13120*	

TIRE LOAD IN KG/LB – TIRE PRESSURE IN BAR/PSI

20"

COMMERCIAL DESCRIPTION	CAI *MSPN*	Max. dist./ hour **km** *mile*	TKPH [1] *TMPH*	e **mm** *inch*	D **mm** *inch*	R' **mm** *inch*	RC **mm** *inch*	Tread depth **mm** *32rd*	Dual Spacing **mm** *inch*	Cap. **liter** *gallon*	Measuring [2] [3] Recommended Rim	Other Approved [2] [3] Rims
XMINE D2 L5R * 9.00 R 20 Tube Type	**123382** *09497*	**6** *3.7*		**277** *10.9*	**1054** *41.5*	**484** *19.1*	**3203** *126.1*	**51** *64.3*		**98** *25.9*	**7.0**	6.5 - B6.5 7.0T 7.33V 7.5 B 7.0 B7.5

Bar *Psi*	**3** *44*	**4** *58*	**5** *73*	**6** *87*	**7** *102*	**8** *116*
Machine - Use (**kg** - *lbs*)	**LOADERS**					
FRONT LADEN	**3000** *6615*	**3400** *7497*	**3800** *8379*	**4200** *9261*	**4600** *10143*	**5000** *11025*
REAR UNLADEN	**2400** *5292*	**2700** *5954*	**3050** *6725*	**3350** *7387*	**3700** *8159*	**4000** *8820*
Machine - Use (**kg** - *lbs*)	**UNDERGROUND MINE MACHINES**					
ALL AXLES	**2700** *5954*	**3050** *6725*	**3400** *7497*	**3800** *8379*	**4150** *9151*	**4500** *9923*

COMMERCIAL DESCRIPTION	CAI *MSPN*	Max. dist./ hour **km** *mile*	TKPH [1] *TMPH*	e **mm** *inch*	D **mm** *inch*	R' **mm** *inch*	RC **mm** *inch*	Tread depth **mm** *32rd*	Dual Spacing **mm** *inch*	Cap. **liter** *gallon*	Measuring [2] [3] Recommended Rim	Other Approved [2] [3] Rims
XMINE D2 L5R 12.00 R 20 Tube Type	**123392** *19601*	**6** *3.7*		**323** *12.7*	**1174** *46.2*	**534** *21*	**3555** *140*	**57** *71.8*		**146** *38.6*	**8.5**	8.0 8.50V 8.5V 9.0 9.00V B 8.5

Bar *Psi*	**3** *44*	**4** *58*	**5** *73*	**6** *87*	**7** *102*	**8** *116*
Machine - Use (**kg** - *lbs*)	**LOADERS**					
FRONT LADEN	**3400** *7497*	**4000** *8820*	**4600** *10143*	**5200** *11466*	**5800** *12789*	**6400** *14112*
REAR UNLADEN	**2700** *5954*	**3200** *7056*	**3700** *8159*	**4150** *9151*	**4650** *10253*	**5100** *11246*
Machine - Use (**kg** - *lbs*)	**UNDERGROUND MINE MACHINES**					
ALL AXLES	**3050** *6725*	**3600** *7938*	**4150** *9151*	**4700** *10364*	**5200** *11466*	**5750** *12679*

COMMERCIAL DESCRIPTION	CAI *MSPN*	Max. dist./ hour **km** *mile*	TKPH [1] *TMPH*	e **mm** *inch*	D **mm** *inch*	R' **mm** *inch*	RC **mm** *inch*	Tread depth **mm** *32rd*	Dual Spacing **mm** *inch*	Cap. **liter** *gallon*	Measuring [2] [3] Recommended Rim	Other Approved [2] [3] Rims
X LISSE COMPACTEUR C1 E20 PIL X L C 13/80 R 20 Tube Type	**240750** *6569*			**322** *12.7*	**1050** *41.3*	**470** *18.5*	**3160** *124.4*	**12** *15.1*		**140** *37*	**9.0**	7.33V - 7.5 8.00V - 8.5 9.00V - 10.0 - 10.00V B 7.5 - 8.0 B8.0 - 8.0V B8.5 - 8.50V

Bar *Psi*	**3** *44*	**4** *58*	**5** *73*	**6** *87*	**7** *102*	**8** *116*	**8.5** *123*	**9** *131*
Machine - Use (**kg** - *lbs*)	**COMPACTORS**							
10 KM/H *6 MPH*	**2520** *5557*	**3100** *6836*	**3660** *8070*	**4260** *9393*	**4840** *10672*	**5420** *11951*	**5710** *12591*	**6000** *13230*
15 KM/H *9 MPH*	**2240** *4939*	**2760** *6086*	**3260** *7188*	**3790** *8357*	**4310** *9504*	**4820** *10628*	**5000** *11025*	

TIRE LOAD IN KG/LB – TIRE PRESSURE IN BAR/PSI

COMMERCIAL DESCRIPTION	CAI *MSPN*	Max. dist./ hour **km** *mile*	TKPH [1] *TMPH*	e **mm** *inch*	D **mm** *inch*	R' **mm** *inch*	RC **mm** *inch*	Tread depth **mm** *32rd*	Dual Spacing **mm** *inch*	Cap. **liter** *gallon*	Measuring [2] [3] Recommended Rim	Other Approved [2] [3] Rims
XMINE D2 L5R 14.00 R 20 Tubeless	**372138** *64715*	**6** *3.7*		**368** *14.5*	**1236** *48.7*	**557** *21.9*	**3745** *147.4*	**48** *60.5*		**175** *46.2*	**10.0**	10.00W
Bar	**3**	**4**	**5**	**5.5**	**6**	**6.5**	**7**	**8**	**8.5**			
Psi	*44*	*58*	*73*	*80*	*87*	*94*	*102*	*116*	*123*			
Machine - Use (**kg** - *lbs*)	**LOADERS**											
FRONT LADEN	**4140** *9129*	**4920** *10849*	**5690** *12546*	**6070** *13384*	**6460** *14244*	**6850** *15104*	**7230** *15942*	**8010** *17662*				
REAR UNLADEN	**2430** *5358*	**3100** *6836*	**3770** *8313*	**4100** *9041*	**4430** *9768*	**4770** *10518*	**5100** *11246*	**5770** *12723*				
Machine - Use (**kg** - *lbs*)	**UNDERGROUND MINE MACHINES**											
ALL AXLES	**3480** *7673*	**4200** *9261*	**4920** *10849*	**5280** *11642*	**5640** *12436*	**6000** *13230*	**6360** *14024*	**7070** *15589*	**7793** *17184*			

COMMERCIAL DESCRIPTION	CAI *MSPN*	Max. dist./ hour **km** *mile*	TKPH [1] *TMPH*	e **mm** *inch*	D **mm** *inch*	R' **mm** *inch*	RC **mm** *inch*	Tread depth **mm** *32rd*	Dual Spacing **mm** *inch*	Cap. **liter** *gallon*	Measuring [2] [3] Recommended Rim	Other Approved [2] [3] Rims
XZL E2 173G 16.00R20 Tubeless	**123357** *06306*	**70** *43.5*		**438** *17.2*	**1343** *52.9*	**615** *24.2*	**4080** *160.6*	**27** *34*		**315** *83.2*	**10.00W**	11.25
Bar	**2**	**3**	**4**	**5**	**6**	**7**	**8**	**8.5**	**9**	**10**		
Psi	*29*	*44*	*58*	*73*	*87*	*102*	*116*	*123*	*131*	*145*		
Machine - Use (**kg** - *lbs*)	**CRANES AND SIMILAR SPECIALIZED MACHINES**											
0 KM/H *0 MPH*	**3580** *7894*	**4830** *10650*	**6125** *13506*	**7390** *16295*	**8660** *19095*	**9900** *21830*	**11200** *24696*	**12075** *26625*	**12950** *28555*	**14700** *32414*		
5 KM/H *3 MPH*	**2850** *6284*	**3950** *8710*	**5000** *11025*	**6100** *13451*	**7200** *15876*	**8100** *17861*	**9250** *20396*	**9825** *21664*	**10400** *22932*	**11550** *25468*		
10 KM/H *6 MPH*	**2750** *6064*	**3750** *8269*	**4750** *10474*	**5750** *12679*	**6700** *14774*	**7600** *16758*	**8700** *19184*	**9125** *20121*	**9550** *21058*	**10600** *23373*		
20 KM/H *12 MPH*	**2500** *5513*	**3250** *7166*	**4250** *9371*	**5000** *11025*	**6000** *13230*	**6860** *15126*	**7600** *16758*	**8075** *17805*	**8550** *18853*	**9500** *20948*		
30 KM/H *19 MPH*	**2250** *4961*	**3000** *6615*	**3750** *8269*	**4500** *9923*	**5250** *11576*	**6000** *13230*	**6860** *15126*	**7225** *15931*	**7590** *16736*			
40 KM/H *25 MPH*	**2000** *4410*	**2750** *6064*	**3550** *7828*	**4250** *9371*	**5000** *11025*	**5750** *12679*	**6500** *14333*	**6830** *15060*	**7160** *15788*			
50 KM/H *31 MPH*	**1950** *4300*	**2700** *5954*	**3500** *7718*	**4200** *9261*	**4900** *10805*	**5700** *12569*	**6350** *14002*	**6725** *14829*	**7100** *15656*			
65 KM/H *40 MPH*	**1850** *4079*	**2650** *5843*	**3400** *7497*	**4150** *9151*	**4850** *10694*	**5550** *12238*	**6300** *13892*	**6650** *14663*	**7000** *15435*			
80 KM/H *50 MPH*	**1800** *3969*	**2600** *5733*	**3350** *7387*	**4100** *9041*	**4800** *10584*	**5500** *12128*	**6250** *13781*	**6550** *14443*	**6850** *15104*			
90 KM/H *56 MPH*	**1750** *3859*	**2550** *5623*	**3300** *7277*	**4050** *8930*	**4750** *10474*	**5450** *12017*	**6200** *13671*	**6500** *14333*				

COMMERCIAL DESCRIPTION	CAI *MSPN*	Max. dist./ hour **km** *mile*	TKPH [1] *TMPH*	e **mm** *inch*	D **mm** *inch*	R' **mm** *inch*	RC **mm** *inch*	Tread depth **mm** *32rd*	Dual Spacing **mm** *inch*	Cap. **liter** *gallon*	Measuring [2] [3] Recommended Rim	Other Approved [2] [3] Rims
XMINE D2 L5 ** 450/70 R 20 Tubeless	**976013** *77552*	**8** *5*		**433** *17*	**1163** *45.8*	**515** *20.3*	**3488** *137.3*	**37** *46.6*		**229** *60.5*	**15.00T**	
Bar	**5**	**5.5**	**6**	**6.5**	**7**	**7.25**	**7.5**	**7.75**	**8**	**8.25**		
Psi	*73*	*80*	*87*	*94*	*102*	*105*	*109*	*112*	*116*	*120*		
Machine - Use (**kg** - *lbs*)	**LOADERS**											
FRONT LADEN	**6700** *14774*	**7100** *15656*	**7750** *17089*	**8000** *17640*	**8500** *18743*	**8750** *19294*	**9000** *19845*	**9250** *20396*	**9500** *20948*	**9750** *21499*		
REAR UNLADEN	**5360** *11819*	**5680** *12524*	**6200** *13671*	**6400** *14112*	**6800** *14994*	**7000** *15435*	**7200** *15876*	**7400** *16317*	**7600** *16758*	**7800** *17199*		
Machine - Use (**kg** - *lbs*)	**UNDERGROUND TRANSPORT MACHINE**											
ALL AXLES	**6000** *13230*	**6500** *14333*	**6900** *15215*	**7300** *16097*	**7750** *17089*	**8000** *17640*	**8250** *18191*	**8500** *18743*	**8550** *18853*	**8750** *19294*		

TIRE LOAD IN KG/LB – TIRE PRESSURE IN BAR/PSI

20.5"

COMMERCIAL DESCRIPTION	CAI *MSPN*	Max. dist./ hour **km** *mile*	TKPH [1] *TMPH*	e **mm** *inch*	D **mm** *inch*	R' **mm** *inch*	RC **mm** *inch*	Tread depth **mm** *32rd*	Dual Spacing **mm** *inch*	Cap. **liter** *gallon*	Measuring [2] [3] Recommended Rim	Other Approved [2] [3] Rims
XS E7 173F 525/65 R 20.5 Tubeless [9]	**109421** *25906*			**521** *20.5*	**1200** *47.2*	**548** *21.6*	**3640** *143.3*	**17** *21.4*		**337** *89*	**16.00**	

Bar *Psi*	**1** *15*	**2** *29*	**3** *44*	**4** *58*	**5** *73*	**6** *87*	**7** *102*	**8** *116*
Machine - Use (**kg** - *lbs*)	**DESERT CONDITIONS 80 KM/H MAX.**							
ROAD IN SINGLE	**1450** *3197*	**2150** *4741*	**2850** *6284*	**3600** *7938*	**4300** *9482*	**5000** *11025*	**5750** *12679*	**6500** *14333*
TRACK IN SINGLE	**1700** *3749*	**2600** *5733*	**3500** *7718*	**4450** *9812*	**5250** *11576*			
SAND IN SINGLE	**2300** *5072*	**3850** *8489*	**5250** *11576*					

COMMERCIAL DESCRIPTION	CAI *MSPN*	Max. dist./ hour **km** *mile*	TKPH [1] *TMPH*	e **mm** *inch*	D **mm** *inch*	R' **mm** *inch*	RC **mm** *inch*	Tread depth **mm** *32rd*	Dual Spacing **mm** *inch*	Cap. **liter** *gallon*	Measuring [2] [3] Recommended Rim	Other Approved [2] [3] Rims
XS E7 176F 24 R 20.5 Tubeless [9]	**109174** *23002*			**602** *23.7*	**1374** *54.1*	**620** *24.4*	**4150** *163.4*	**17** *21.4*		**538** *142.1*	**18.00**	

Bar *Psi*	**1** *15*	**2** *29*	**2.5** *36*	**3** *44*	**3.5** *51*	**4** *58*	**4.5** *65*	**5** *73*	**5.5** *80*	**6** *87*
Machine - Use (**kg** - *lbs*)	**DESERT CONDITIONS 80 KM/H MAX.**									
ROAD IN SINGLE	**1950** *4300*	**2950** *6505*	**3450** *7607*	**4000** *8820*	**4500** *9923*	**5010** *11047*	**5520** *12172*	**6050** *13340*	**6575** *14498*	**7100** *15656*
TRACK IN SINGLE	**2550** *5623*	**3650** *8048*	**4250** *9371*	**4750** *10474*	**5300** *11687*	**5850** *12899*	**6400** *14112*	**6750** *14884*	**7100** *15656*	
SAND IN SINGLE	**3500** *7718*	**5350** *11797*	**6400** *14112*	**7100** *15656*						

21"

COMMERCIAL DESCRIPTION	CAI *MSPN*	Max. dist./ hour **km** *mile*	TKPH [1] *TMPH*	e **mm** *inch*	D **mm** *inch*	R' **mm** *inch*	RC **mm** *inch*	Tread depth **mm** *32rd*	Dual Spacing **mm** *inch*	Cap. **liter** *gallon*	Measuring [2] [3] Recommended Rim	Other Approved [2] [3] Rims
XZL E2 176G 24 R 21 Tubeless [9]	**110257** *76025*			**608** *23.9*	**1388** *54.6*	**631** *24.8*	**4200** *165.4*				**18.00/1.5**	

Bar *Psi*	**1** *15*	**2** *29*	**2.5** *36*	**3** *44*	**3.5** *51*	**4** *58*	**4.5** *65*	**5** *73*	**5.5** *80*	**6** *87*
Machine - Use (**kg** - *lbs*)	**DESERT CONDITIONS 80 KM/H MAX.**									
ROAD IN SINGLE	**1950** *4300*	**2950** *6505*	**3450** *7607*	**4000** *8820*	**4500** *9923*	**5010** *11047*	**5520** *12172*	**6050** *13340*	**6575** *14498*	**7100** *15656*
TRACK IN SINGLE	**2550** *5623*	**3650** *8048*	**4250** *9371*	**4750** *10474*	**5300** *11687*	**5850** *12899*	**6400** *14112*	**6750** *14884*	**7100** *15656*	
SAND IN SINGLE	**3500** *7718*	**5350** *11797*	**6400** *14112*							

TIRE LOAD IN KG/LB – TIRE PRESSURE IN BAR/PSI

24"

COMMERCIAL DESCRIPTION	CAI *MSPN*	Max. dist./ hour **km** *mile*	TKPH [1] *TMPH*	e **mm** *inch*	D **mm** *inch*	R' **mm** *inch*	RC **mm** *inch*	Tread depth **mm** *32rd*	Dual Spacing **mm** *inch*	Cap. **liter** *gallon*	Measuring [2] [3] Recommended Rim	Other Approved [2] [3] Rims
XZH E3 *** **12.00 R 24 Tube Type**	**123369** *72233*	**35** *21.7*	**119** *82*	**321** *12.6*	**1258** *49.5*	**591** *23.3*	**3857** *151.9*	**30** *37.8*		**171** *45.2*	**8.5**	7.33V 8.0 8.00V 8.50V

Bar *Psi*	**4** *58*	**4.5** *65*	**5** *73*	**5.5** *80*	**6** *87*	**6.5** *94*	**7** *102*	**8** *116*	**8.5** *123*	
Machine - Use (**kg** - *lbs*)	**TRANSPORT**									
STANDARD	**2700** *5954*	**2950** *6505*	**3200** *7056*	**3475** *7662*	**3750** *8269*	**4000** *8820*	**4250** *9371*	**4500** *9923*	**4650** *10253*	

COMMERCIAL DESCRIPTION	CAI *MSPN*	Max. dist./ hour **km** *mile*	TKPH [1] *TMPH*	e **mm** *inch*	D **mm** *inch*	R' **mm** *inch*	RC **mm** *inch*	Tread depth **mm** *32rd*	Dual Spacing **mm** *inch*	Cap. **liter** *gallon*	Measuring [2] [3] Recommended Rim	Other Approved [2] [3] Rims
XK A L3 *** **12.00 R 24 Tube Type**	**242110** *06809*	**14** *8.7*		**330** *13*	**1244** *49*	**569** *22.4*	**3775** *148.6*	**21** *26.5*		**155** *41*	**8.5**	7.33V 7.5 8.0 8.00V 8.50V

Bar *Psi*	**2** *29*	**2.5** *36*	**3** *44*	**3.5** *51*	**4** *58*	**4.5** *65*	**5** *73*	**5.5** *80*	**6** *87*	**7** *102*
Machine - Use (**kg** - *lbs*)	**UNDERGROUND MINE MACHINES**									
ALL AXLES	**2050** *4520*	**2450** *5402*	**2750** *6064*	**3100** *6836*	**3450** *7607*	**3800** *8379*	**4150** *9151*	**4475** *9867*	**4800** *10584*	**5500** *12128*

COMMERCIAL DESCRIPTION	CAI *MSPN*	Max. dist./ hour **km** *mile*	TKPH [1] *TMPH*	e **mm** *inch*	D **mm** *inch*	R' **mm** *inch*	RC **mm** *inch*	Tread depth **mm** *32rd*	Dual Spacing **mm** *inch*	Cap. **liter** *gallon*	Measuring [2] [3] Recommended Rim	Other Approved [2] [3] Rims
XMINE D2 L5R **12.00 R 24 Tubeless**	**242046** *19455*	**6** *3.7*		**330** *13*	**1280** *50.4*	**594** *23.4*	**3906** *153.8*	**57** *71.8*		**138** *36.5*	**8.5**	7.33V 7.5 8.0 8.00V 8.50V

Bar *Psi*	**2** *29*	**2.5** *36*	**3** *44*	**3.5** *51*	**4** *58*	**4.5** *65*	**5** *73*	**5.5** *80*	**6** *87*	**7** *102*
Machine - Use (**kg** - *lbs*)	**LOADERS**									
FRONT LADEN	**2300** *5072*	**2700** *5954*	**3050** *6725*	**3450** *7607*	**3850** *8489*	**4200** *9261*	**4600** *10143*	**4975** *10970*	**5350** *11797*	**6100** *13451*
REAR UNLADEN	**1850** *4079*	**2150** *4741*	**2450** *5402*	**2750** *6064*	**3100** *6836*	**3350** *7387*	**3700** *8159*	**4000** *8820*	**4300** *9482*	**4900** *10805*
Machine - Use (**kg** - *lbs*)	**UNDERGROUND MINE MACHINES**									
ALL AXLES	**2050** *4520*	**2450** *5402*	**2750** *6064*	**3100** *6836*	**3450** *7607*	**3800** *8379*	**4150** *9151*	**4475** *9867*	**4800** *10584*	**5500** *12128*

COMMERCIAL DESCRIPTION	CAI *MSPN*	Max. dist./ hour **km** *mile*	TKPH [1] *TMPH*	e **mm** *inch*	D **mm** *inch*	R' **mm** *inch*	RC **mm** *inch*	Tread depth **mm** *32rd*	Dual Spacing **mm** *inch*	Cap. **liter** *gallon*	Measuring [2] [3] Recommended Rim	Other Approved [2] [3] Rims
XSM D2+ L5S **12.00 R 24 Tubeless**	**123647** *80803*	**4** *2.5*		**325** *12.8*	**1264** *49.8*	**580** *22.8*	**3840** *151.2*	**57** *71.8*		**140** *37*	**8.5**	7.33V 7.5 8.0 8.00V 8.50V

Bar *Psi*	**2** *29*	**2.5** *36*	**3** *44*	**3.5** *51*	**4** *58*	**4.5** *65*	**5** *73*	**5.5** *80*	**6** *87*	**7** *102*
Machine - Use (**kg** - *lbs*)	**LOADERS**									
FRONT LADEN	**2300** *5072*	**2700** *5954*	**3050** *6725*	**3450** *7607*	**3850** *8489*	**4200** *9261*	**4600** *10143*	**4975** *10970*	**5350** *11797*	**6100** *13451*
REAR UNLADEN	**1850** *4079*	**2150** *4741*	**2450** *5402*	**2750** *6064*	**3100** *6836*	**3350** *7387*	**3700** *8159*	**4000** *8820*	**4300** *9482*	**4900** *10805*
Machine - Use (**kg** - *lbs*)	**UNDERGROUND MINE MACHINES**									
ALL AXLES	**2050** *4520*	**2450** *5402*	**2750** *6064*	**3100** *6836*	**3450** *7607*	**3800** *8379*	**4150** *9151*	**4475** *9867*	**4800** *10584*	**5500** *12128*

TIRE LOAD IN KG/LB – TIRE PRESSURE IN BAR/PSI

COMMERCIAL DESCRIPTION	CAI *MSPN*	Max. dist./ hour **km** *mile*	**TKPH** [1] *TMPH*	e **mm** *inch*	D **mm** *inch*	R' **mm** *inch*	RC **mm** *inch*	Tread depth **mm** *32rd*	Dual Spacing **mm** *inch*	Cap. **liter** *gallon*	Measuring [2] [3] Recommended Rim	Other Approved [2] [3] Rims
XGL A2 L2 * TG 13.00 R 24 Tubeless (6 - 10)	**123386** *24704*	**16** *9.9*		**335** *13.2*	**1296** *51*	**570** *22.4*	**3875** *152.6*	**25** *31.5*		**215** *56.8*	**8.00 TG SDC**	10.00 VA SDC 9.00/1.5 DC

Bar *Psi*	**2** *29*	**2.5** *36*	**3** *44*	**3.5** *51*	**4** *58*	**4.5** *65*	**5** *73*
Machine - Use (**kg** - *lbs*)	**LOADERS**						
FRONT LADEN	**2650** *5843*	**3100** *6836*	**3600** *7938*	**4050** *8930*	**4500** *9923*	**4950** *10915*	**5400** *11907*
REAR UNLADEN	**2100** *4631*	**2500** *5513*	**2900** *6395*	**3250** *7166*	**3600** *7938*	**3950** *8710*	**4300** *9482*
Machine - Use (**kg** - *lbs*)	**GRADERS**						
ALL AXLES	**1900** *4190*	**2225** *4906*	**2550** *5623*	**2900** *6395*			

COMMERCIAL DESCRIPTION	CAI *MSPN*	Max. dist./ hour **km** *mile*	**TKPH** [1] *TMPH*	e **mm** *inch*	D **mm** *inch*	R' **mm** *inch*	RC **mm** *inch*	Tread depth **mm** *32rd*	Dual Spacing **mm** *inch*	Cap. **liter** *gallon*	Measuring [2] [3] Recommended Rim	Other Approved [2] [3] Rims
XK A E3 * 14.00 R 24 Tube Type**	**251590** *06866*	**14** *8.7*		**401** *15.8*	**1380** *54.3*	**638** *25.1*	**4205** *165.6*	**24** *30.2*		**270** *71.3*	**10.0**	10.00W 9.0 9.00V

Bar *Psi*	**2** *29*	**2.5** *36*	**3** *44*	**3.5** *51*	**4** *58*	**4.5** *65*	**5** *73*	**5.5** *80*	**6** *87*	**7** *102*
Machine - Use (**kg** - *lbs*)	**UNDERGROUND MINE MACHINES**									
ALL AXLES	**2950** *6505*	**3400** *7497*	**3850** *8489*	**4300** *9482*	**4800** *10584*	**5300** *11687*	**5750** *12679*	**6200** *13671*	**6550** *14443*	**7250** *15986*
Bar *Psi*	**4** *58*	**5** *73*	**5.5** *80*	**6** *87*	**6.5** *94*	**7** *102*	**8** *116*			
Machine - Use (**kg** - *lbs*)	**TRANSPORT**									
STANDARD	**3750** *8269*	**4500** *9923*	**4850** *10694*	**5600** *12348*	**5700** *12569*	**5800** *12789*	**6150** *13561*			

COMMERCIAL DESCRIPTION	CAI *MSPN*	Max. dist./ hour **km** *mile*	**TKPH** [1] *TMPH*	e **mm** *inch*	D **mm** *inch*	R' **mm** *inch*	RC **mm** *inch*	Tread depth **mm** *32rd*	Dual Spacing **mm** *inch*	Cap. **liter** *gallon*	Measuring [2] [3] Recommended Rim	Other Approved [2] [3] Rims
XK D1 A E4 * 14.00 R 24 Tube Type**	**251592** *06874*	**18** *11.2*	**84** *58*	**401** *15.8*	**1412** *55.6*	**657** *25.9*	**4313** *169.8*	**37** *46.6*		**270** *71.3*	**10.0**	10.00W 9.0 9.00V

Bar *Psi*	**2** *29*	**2.5** *36*	**3** *44*	**3.5** *51*	**4** *58*	**4.5** *65*	**5** *73*	**5.5** *80*	**6** *87*	**7** *102*
Machine - Use (**kg** - *lbs*)	**UNDERGROUND MINE MACHINES**									
ALL AXLES	**2950** *6505*	**3400** *7497*	**3850** *8489*	**4300** *9482*	**4800** *10584*	**5300** *11687*	**5750** *12679*	**6200** *13671*	**6550** *14443*	**7250** *15986*
Bar *Psi*	**4** *58*	**5** *73*	**5.5** *80*	**6** *87*	**6.5** *94*	**7** *102*	**8** *116*			
Machine - Use (**kg** - *lbs*)	**TRANSPORT**									
STANDARD	**3750** *8269*	**4500** *9923*	**4850** *10694*	**5600** *12348*	**5700** *12569*	**5800** *12789*	**6150** *13561*			

COMMERCIAL DESCRIPTION	CAI *MSPN*	Max. dist./ hour **km** *mile*	**TKPH** [1] *TMPH*	e **mm** *inch*	D **mm** *inch*	R' **mm** *inch*	RC **mm** *inch*	Tread depth **mm** *32rd*	Dual Spacing **mm** *inch*	Cap. **liter** *gallon*	Measuring [2] [3] Recommended Rim	Other Approved [2] [3] Rims
XSM D2+ L5S 14.00 R 24 Tubeless	**123597** *80802*	**4** *2.5*		**401** *15.8*	**1395** *54.9*	**636** *25*	**4227** *166.4*	**58** *73.1*		**266** *70.3*	**10.0**	10.00W 9.0 9.00V

Bar *Psi*	**2** *29*	**2.5** *36*	**3** *44*	**3.5** *51*	**4** *58*	**4.5** *65*	**5** *73*	**5.5** *80*	**6** *87*	**7** *102*
Machine - Use (**kg** - *lbs*)	**LOADERS**									
FRONT LADEN	**3250** *7166*	**3750** *8269*	**4300** *9482*	**4800** *10584*	**5350** *11797*	**5900** *13010*	**6400** *14112*	**6900** *15215*		
REAR UNLADEN	**2600** *5733*	**3000** *6615*	**3450** *7607*	**3850** *8489*	**4300** *9482*	**4700** *10364*	**5100** *11246*	**5500** *12128*		
Machine - Use (**kg** - *lbs*)	**UNDERGROUND MINE MACHINES**									
ALL AXLES	**2950** *6505*	**3400** *7497*	**3850** *8489*	**4300** *9482*	**4800** *10584*	**5300** *11687*	**5750** *12679*	**6200** *13671*	**6550** *14443*	**7250** *15986*

TIRE LOAD IN KG/LB – TIRE PRESSURE IN BAR/PSI

COMMERCIAL DESCRIPTION	CAI *MSPN*	Max. dist./ hour **km** *mile*	**TKPH** [1] *TMPH*	e **mm** *inch*	D **mm** *inch*	R' **mm** *inch*	RC **mm** *inch*	Tread depth **mm** *32rd*	Dual Spacing **mm** *inch*	Cap. **liter** *gallon*	Measuring [2] [3] Recommended Rim	Other Approved [2] [3] Rims
XSNOPLUS L2 * TG 14.00 R 24 TG Tubeless [6]	**123861** *53173*	**16** *9.9*		**372** *14.6*	**1364** *53.7*	**545** *21.5*	**3941** *155.2*	**24** *30.2*		**264** *69.7*	**8.00 TG SDC**	10.00VA SDC 9.00/1.5 DC

Bar *Psi*	**2** *29*	**2.5** *36*	**3** *44*	**3.5** *51*	**4** *58*	**4.5** *65*	**5** *73*	**5.5** *80*
Machine - Use (**kg** - *lbs*)	**LOADERS**							
FRONT LADEN	**3250** *7166*	**3750** *8269*	**4300** *9482*	**4800** *10584*	**5350** *11797*	**5900** *13010*	**6400** *14112*	**6900** *15215*
REAR UNLADEN	**2600** *5733*	**3000** *6615*	**3450** *7607*	**3850** *8489*	**4300** *9482*	**4700** *10364*	**5100** *11246*	**5500** *12128*
Machine - Use (**kg** - *lbs*)	**GRADERS**							
ALL AXLES	**2300** *5072*	**2725** *6009*	**3125** *6891*	**3550** *7828*				

COMMERCIAL DESCRIPTION	CAI *MSPN*	Max. dist./ hour **km** *mile*	**TKPH** [1] *TMPH*	e **mm** *inch*	D **mm** *inch*	R' **mm** *inch*	RC **mm** *inch*	Tread depth **mm** *32rd*	Dual Spacing **mm** *inch*	Cap. **liter** *gallon*	Measuring [2] [3] Recommended Rim	Other Approved [2] [3] Rims
XGL A2 L2 * TG 14.00 R 24 TG Tubeless [6]	**123395** *15924*	**16** *9.9*		**371** *14.6*	**1360** *53.5*	**592** *23.3*	**4051** *159.5*	**25** *31.5*		**310** *81.9*	**8.00 TG SDC**	10.00VA SDC 9.00/1.5 DC

Bar *Psi*	**2** *29*	**2.5** *36*	**3** *44*	**3.5** *51*	**4** *58*	**4.5** *65*	**5** *73*	**5.5** *80*
Machine - Use (**kg** - *lbs*)	**LOADERS**							
FRONT LADEN	**3250** *7166*	**3750** *8269*	**4300** *9482*	**4800** *10584*	**5350** *11797*	**5900** *13010*	**6400** *14112*	**6900** *15215*
REAR UNLADEN	**2600** *5733*	**3000** *6615*	**3450** *7607*	**3850** *8489*	**4300** *9482*	**4700** *10364*	**5100** *11246*	**5500** *12128*
Machine - Use (**kg** - *lbs*)	**GRADERS**							
ALL AXLES	**2300** *5072*	**2725** *6009*	**3125** *6891*	**3550** *7828*				

COMMERCIAL DESCRIPTION	CAI *MSPN*	Max. dist./ hour **km** *mile*	**TKPH** [1] *TMPH*	e **mm** *inch*	D **mm** *inch*	R' **mm** *inch*	RC **mm** *inch*	Tread depth **mm** *32rd*	Dual Spacing **mm** *inch*	Cap. **liter** *gallon*	Measuring [2] [3] Recommended Rim	Other Approved [2] [3] Rims
X LISSE COMPACTEUR C1 15.00 R 24 Pil (17/80 R 24) Tube Type	**252211** *44438*			**415** *16.3*	**1334** *52.5*	**592** *23.3*	**4002** *157.6*	**21** *26.5*		**320** *84.5*	**10.0**	10.00W 10.0W 9.0 9.00V

Bar *Psi*	**3** *44*	**4** *58*	**5** *73*	**6** *87*	**6.5** *94*	**7** *102*	**7.5** *109*	**8** *116*	**8.5** *123*
Machine - Use (**kg** - *lbs*)	**COMPACTORS**								
10 KM/H *6 MPH*	**5320** *11731*	**6540** *14421*	**7750** *17089*	**8965** *19768*	**9570** *21102*	**10180** *22447*	**10790** *23792*	**11390** *25115*	**12000** *26460*
15 KM/H *9 MPH*	**4740** *10452*	**5820** *12833*	**6900** *15215*	**7980** *17596*	**8520** *18787*				

COMMERCIAL DESCRIPTION	CAI *MSPN*	Max. dist./ hour **km** *mile*	**TKPH** [1] *TMPH*	e **mm** *inch*	D **mm** *inch*	R' **mm** *inch*	RC **mm** *inch*	Tread depth **mm** *32rd*	Dual Spacing **mm** *inch*	Cap. **liter** *gallon*	Measuring [2] [3] Recommended Rim	Other Approved [2] [3] Rims
XGL A2 L2 * TG 16.00 R 24 Tubeless [6]	**123903** *45611*	**16** *9.9*		**435** *17.1*	**1500** *59.1*	**646** *25.4*	**4451** *175.2*	**27** *34*		**412** *108.9*	**10.00 VA SDC**	

Bar *Psi*	**2** *29*	**2.5** *36*	**3** *44*	**3.5** *51*	**4** *58*	**4.5** *65*	**5** *73*
Machine - Use (**kg** - *lbs*)	**LOADERS**						
FRONT LADEN	**4500** *9923*	**5150** *11356*	**5800** *12789*	**6400** *14112*	**7050** *15545*	**7700** *16979*	**8350** *18412*
REAR UNLADEN	**3600** *7938*	**4100** *9041*	**4650** *10253*	**5100** *11246*	**5650** *12458*	**6150** *13561*	**6700** *14774*
Machine - Use (**kg** - *lbs*)	**GRADERS**						
ALL AXLES	**3150** *6946*	**3625** *7993*	**4125** *9096*	**4625** *10198*			

TIRE LOAD IN KG/LB – TIRE PRESSURE IN BAR/PSI

COMMERCIAL DESCRIPTION	CAI *MSPN*	Max. dist./ hour **km** *mile*	TKPH [1] *TMPH*	e **mm** *inch*	D **mm** *inch*	R' **mm** *inch*	RC **mm** *inch*	Tread depth **mm** *32rd*	Dual Spacing **mm** *inch*	Cap. **liter** *gallon*	Measuring [2] [3] Recommended Rim	Other Approved [2] [3] Rims
XSNOPLUS 170E 385/95 R 24 Tube Type	**432272** *36887*	**70** *43.5*		**386** *15.2*	**1358** *53.5*	**635** *25*	**4156** *163.6*	**24** *30.2*		**283** *74.8*	**10.00W**	10.0

Bar *Psi*	**5** *73*	**6** *87*	**7** *102*	**8** *116*	**9** *131*
Machine - Use (**kg** - *lbs*)	**CRANES AND SIMILAR SPECIALIZED MACHINES**				
30 KM/H *19 MPH*	**4860** *10716*	**5880** *12965*	**6460** *14244*	**7000** *15435*	**7800** *17199*
40 KM/H *25 MPH*	**4635** *10220*	**5610** *12370*	**6165** *13594*	**6675** *14718*	**7450** *16427*
50 KM/H *31 MPH*	**4410** *9724*	**5340** *11775*	**5865** *12932*	**6355** *14013*	**7100** *15656*
60 KM/H *37 MPH*	**4190** *9239*	**5070** *11179*	**5565** *12271*	**6030** *13296*	**6720** *14818*
65 KM/H *40 MPH*	**4020** *8864*	**4865** *10727*	**5345** *11786*	**5790** *12767*	**6450** *14222*
70 KM/H *43 MPH*	**3740** *8247*	**4525** *9978*	**4970** *10959*	**5385** *11874*	**6000** *13230*
80 KM/H *50 MPH*	**3086** *6805*	**3735** *8236*	**4100** *9041*	**4445** *9801*	**4950** *10915*
90 KM/H *56 MPH*	**2620** *5777*	**3170** *6990*	**3480** *7673*	**3770** *8313*	**4200** *9261*
100 KM/H *62 MPH*	**2245** *4950*	**2715** *5987*	**2980** *6571*	**3230** *7122*	**3600** *7938*

COMMERCIAL DESCRIPTION	CAI *MSPN*	Max. dist./ hour **km** *mile*	TKPH [1] *TMPH*	e **mm** *inch*	D **mm** *inch*	R' **mm** *inch*	RC **mm** *inch*	Tread depth **mm** *32rd*	Dual Spacing **mm** *inch*	Cap. **liter** *gallon*	Measuring [2] [3] Recommended Rim	Other Approved [2] [3] Rims
XMH S E2T 170E 385/95 R 24 Tube Type	**957157** *12407*	**70** *43.5*		**389** *15.3*	**1361** *53.6*	**632** *24.9*	**4155** *163.6*	**24** *30.2*		**284** *75*	**10.00W**	10.0/2.0 9.0 9.00V

Bar *Psi*	**5** *73*	**6** *87*	**7** *102*	**8** *116*	**9** *131*
Machine - Use (**kg** - *lbs*)	**CRANES AND SIMILAR SPECIALIZED MACHINES**				
30 KM/H *19 MPH*	**4860** *10716*	**5880** *12965*	**6460** *14244*	**7000** *15435*	**7800** *17199*
40 KM/H *25 MPH*	**4635** *10220*	**5610** *12370*	**6165** *13594*	**6675** *14718*	**7450** *16427*
50 KM/H *31 MPH*	**4410** *9724*	**5340** *11775*	**5865** *12932*	**6355** *14013*	**7100** *15656*
60 KM/H *37 MPH*	**4190** *9239*	**5070** *11179*	**5565** *12271*	**6030** *13296*	**6720** *14818*
65 KM/H *40 MPH*	**4020** *8864*	**4865** *10727*	**5345** *11786*	**5790** *12767*	**6450** *14222*
70 KM/H *43 MPH*	**3740** *8247*	**4525** *9978*	**4970** *10959*	**5385** *11874*	**6000** *13230*
80 KM/H *50 MPH*	**3086** *6805*	**3735** *8236*	**4100** *9041*	**4445** *9801*	**4950** *10915*
90 KM/H *56 MPH*	**2620** *5777*	**3170** *6990*	**3480** *7673*	**3770** *8313*	**4200** *9261*
100 KM/H *62 MPH*	**2245** *4950*	**2715** *5987*	**2980** *6571*	**3230** *7122*	**3600** *7938*

TIRE LOAD IN KG/LB – TIRE PRESSURE IN BAR/PSI

COMMERCIAL DESCRIPTION	CAI *MSPN*	Max. dist./ hour **km** *mile*	TKPH [1] *TMPH*	e **mm** *inch*	D **mm** *inch*	R' **mm** *inch*	RC **mm** *inch*	Tread depth **mm** *32rd*	Dual Spacing **mm** *inch*	Cap. **liter** *gallon*	Measuring [2] [3] Recommended Rim	Other Approved [2] [3] Rims
X-CRANE 170F 385/95 R 24 Tube Type	**778245** *93770*	**80** *49.7*		**376** *14.8*	**1361** *53.6*	**631** *24.8*	**4153** *163.5*	**23** *29*		**284** *75*	**10.00W**	10.0 11.25/1.3

Bar *Psi*	**5** *73*	**6** *87*	**7** *102*	**8** *116*	**9** *131*
Machine - Use (**kg** - *lbs*)	**CRANES AND SIMILAR SPECIALIZED MACHINES**				
30 KM/H *19 MPH*	**4750** *10474*	**5440** *11995*	**6125** *13506*	**6815** *15027*	**7500** *16538*
40 KM/H *25 MPH*	**4370** *9636*	**5005** *11036*	**5635** *12425*	**6270** *13825*	**6900** *15215*
50 KM/H *31 MPH*	**4255** *9382*	**4870** *10738*	**5490** *12105*	**6105** *13462*	**6720** *14818*
60 KM/H *37 MPH*	**4180** *9217*	**4785** *10551*	**5390** *11885*	**5995** *13219*	**6600** *14553*
65 KM/H *40 MPH*	**4085** *9007*	**4675** *10308*	**5270** *11620*	**5860** *12921*	**6450** *14222*
70 KM/H *43 MPH*	**3990** *8798*	**4570** *10077*	**5145** *11345*	**5725** *12624*	**6300** *13892*
80 KM/H *50 MPH*	**3800** *8379*	**4350** *9592*	**4900** *10805*	**5450** *12017*	**6000** *13230*
90 KM/H *56 MPH*	**3570** *7872*	**4090** *9018*	**4605** *10154*	**5120** *11290*	**5640** *12436*
100 KM/H *62 MPH*	**3230** *7122*	**3700** *8159*	**4165** *9184*	**4630** *10209*	**5100** *11246*

25"

COMMERCIAL DESCRIPTION	CAI *MSPN*	Max. dist./ hour **km** *mile*	TKPH [1] *TMPH*	e **mm** *inch*	D **mm** *inch*	R' **mm** *inch*	RC **mm** *inch*	Tread depth **mm** *32rd*	Dual Spacing **mm** *inch*	Cap. **liter** *gallon*	Measuring [2] [3] Recommended Rim	Other Approved [2] [3] Rims
XH D1 A E4 * 14.00 R 25 Tubeless**	**123331** *34504*	**22** *13.7*	**102** *70*	**401** *15.8*	**1410** *55.5*	**650** *25.6*	**4291** *168.9*	**38** *47.9*		**275** *72.7*	**10.00/1.5**	11.25/1.3

Bar *Psi*	**4** *58*	**4.5** *65*	**5** *73*	**5.5** *80*	**5.75** *83*	**6** *87*	**7** *102*	**8.5** *123*
Machine - Use (**kg** - *lbs*)	**TRANSPORT**							
STANDARD	**3750** *8269*	**4100** *9041*	**4500** *9923*	**4850** *10694*	**5100** *11246*	**5250** *11576*	**5800** *12789*	**6350** *14002*

COMMERCIAL DESCRIPTION	CAI *MSPN*	Max. dist./ hour **km** *mile*	TKPH [1] *TMPH*	e **mm** *inch*	D **mm** *inch*	R' **mm** *inch*	RC **mm** *inch*	Tread depth **mm** *32rd*	Dual Spacing **mm** *inch*	Cap. **liter** *gallon*	Measuring [2] [3] Recommended Rim	Other Approved [2] [3] Rims
XSNOPLUS E2 170E 385/95 R 25 Tubeless	**705961** *5893*	**70** *43.5*		**388** *15.3*	**1365** *53.7*	**632** *24.9*	**4163** *163.9*	**25** *31.5*		**280** *74*	**9.50/1.7 CR**	10.00/1.5 11.25/1.3

Bar *Psi*	**5** *73*	**6** *87*	**7** *102*	**8** *116*	**9** *131*
Machine - Use (**kg** - *lbs*)	**CRANES AND SIMILAR SPECIALIZED MACHINES**				
30 KM/H *19 MPH*	**4860** *10716*	**5880** *12965*	**6460** *14244*	**7000** *15435*	**7800** *17199*
40 KM/H *25 MPH*	**4635** *10220*	**5610** *12370*	**6165** *13594*	**6675** *14718*	**7450** *16427*
50 KM/H *31 MPH*	**4410** *9724*	**5340** *11775*	**5865** *12932*	**6355** *14013*	**7100** *15656*
60 KM/H *37 MPH*	**4190** *9239*	**5070** *11179*	**5565** *12271*	**6030** *13296*	**6720** *14818*
65 KM/H *40 MPH*	**4020** *8864*	**4865** *10727*	**5345** *11786*	**5790** *12767*	**6450** *14222*
70 KM/H *43 MPH*	**3740** *8247*	**4525** *9978*	**4970** *10959*	**5385** *11874*	**6000** *13230*
80 KM/H *50 MPH*	**3086** *6805*	**3735** *8236*	**4100** *9041*	**4445** *9801*	**4950** *10915*
90 KM/H *56 MPH*	**2620** *5777*	**3170** *6990*	**3480** *7673*	**3770** *8313*	**4200** *9261*
100 KM/H *62 MPH*	**2245** *4950*	**2715** *5987*	**2980** *6571*	**3230** *7122*	**3600** *7938*

TIRE LOAD IN KG/LB – TIRE PRESSURE IN BAR/PSI

COMMERCIAL DESCRIPTION	CAI *MSPN*	Max. dist./ hour **km** *mile*	**TKPH** [1] *TMPH*	e **mm** *inch*	D **mm** *inch*	R' **mm** *inch*	RC **mm** *inch*	Tread depth **mm** *32rd*	Dual Spacing **mm** *inch*	Cap. **liter** *gallon*	Measuring [2] [3] Recommended Rim	Other Approved [2] [3] Rims
XMH S 170E **385/95 R 25 Tubeless**	**254174** *21608*	**70** *43.5*		**391** *15.4*	**1361** *53.6*	**632** *24.9*	**4155** *163.6*	**24** *30.2*		**278** *73.4*	**9.50/1.7 CR**	10.00/1.5 11.25/1.3

Bar *Psi*	**5** *73*	**6** *87*	**7** *102*	**8** *116*	**9** *131*
Machine - Use (**kg** - *lbs*)	**CRANES AND SIMILAR SPECIALIZED MACHINES**				
30 KM/H *19 MPH*	**4860** *10716*	**5880** *12965*	**6460** *14244*	**7000** *15435*	**7800** *17199*
40 KM/H *25 MPH*	**4635** *10220*	**5610** *12370*	**6165** *13594*	**6675** *14718*	**7450** *16427*
50 KM/H *31 MPH*	**4410** *9724*	**5340** *11775*	**5865** *12932*	**6355** *14013*	**7100** *15656*
60 KM/H *37 MPH*	**4190** *9239*	**5070** *11179*	**5565** *12271*	**6030** *13296*	**6720** *14818*
65 KM/H *40 MPH*	**4020** *8864*	**4865** *10727*	**5345** *11786*	**5790** *12767*	**6450** *14222*
70 KM/H *43 MPH*	**3740** *8247*	**4525** *9978*	**4970** *10959*	**5385** *11874*	**6000** *13230*
80 KM/H *50 MPH*	**3086** *6805*	**3735** *8236*	**4100** *9041*	**4445** *9801*	**4950** *10915*
90 KM/H *56 MPH*	**2620** *5777*	**3170** *6990*	**3480** *7673*	**3770** *8313*	**4200** *9261*
100 KM/H *62 MPH*	**2245** *4950*	**2715** *5987*	**2980** *6571*	**3230** *7122*	**3600** *7938*

COMMERCIAL DESCRIPTION	CAI *MSPN*	Max. dist./ hour **km** *mile*	**TKPH** [1] *TMPH*	e **mm** *inch*	D **mm** *inch*	R' **mm** *inch*	RC **mm** *inch*	Tread depth **mm** *32rd*	Dual Spacing **mm** *inch*	Cap. **liter** *gallon*	Measuring [2] [3] Recommended Rim	Other Approved [2] [3] Rims
X-CRANE + 170F **385/95 R 25 Tubeless**	**682834** *32768*	**80** *49.7*		**380** *15*	**1365** *53.7*	**633** *24.9*	**4165** *164*	**23** *29*		**280** *74*	**9.50/1.7 CR**	10.00/1.5 11.25/1.3

Bar *Psi*	**5** *73*	**6** *87*	**7** *102*	**8** *116*	**9** *131*
Machine - Use (**kg** - *lbs*)	**CRANES AND SIMILAR SPECIALIZED MACHINES**				
30 KM/H *19 MPH*	**4750** *10474*	**5440** *11995*	**6125** *13506*	**6815** *15027*	**7500** *16538*
40 KM/H *25 MPH*	**4370** *9636*	**5005** *11036*	**5635** *12425*	**6270** *13825*	**6900** *15215*
50 KM/H *31 MPH*	**4255** *9382*	**4870** *10738*	**5490** *12105*	**6105** *13462*	**6720** *14818*
60 KM/H *37 MPH*	**4180** *9217*	**4785** *10551*	**5390** *11885*	**5995** *13219*	**6600** *14553*
65 KM/H *40 MPH*	**4085** *9007*	**4575** *10088*	**5270** *11620*	**5860** *12921*	**6450** *14222*
70 KM/H *43 MPH*	**3990** *8798*	**4570** *10077*	**5145** *11345*	**5725** *12624*	**6300** *13892*
80 KM/H *50 MPH*	**3800** *8379*	**4350** *9592*	**4900** *10805*	**5450** *12017*	**6000** *13230*
90 KM/H *56 MPH*	**3570** *7872*	**4090** *9018*	**4605** *10154*	**5120** *11290*	**5640** *12436*
100 KM/H *62 MPH*	**3230** *7122*	**3700** *8159*	**4165** *9184*	**4630** *10209*	**5100** *11246*

TIRE LOAD IN KG/LB – TIRE PRESSURE IN BAR/PSI

COMMERCIAL DESCRIPTION	CAI *MSPN*	Max. dist./ hour **km** *mile*	TKPH [1] *TMPH*	e **mm** *inch*	D **mm** *inch*	R' **mm** *inch*	RC **mm** *inch*	Tread depth **mm** *32rd*	Dual Spacing **mm** *inch*	Cap. **liter** *gallon*	Measuring [2] [3] Recommended Rim	Other Approved [2] [3] Rims
XH A L3 * 15.5 R 25 Tubeless	**123008** *25042*	**16** *9.9*		**404** *15.9*	**1270** *50*	**555** *21.9*	**3789** *149.2*	**26** *32.8*		**245** *64.7*	**12.00/1.3**	12.00/1.3DC 13.00/1.4DC

Bar *Psi*	**2** *29*	**2.5** *36*	**3** *44*	**3.5** *51*	**4** *58*	**4.5** *65*
Machine - Use (**kg** - *lbs*)	**LOADERS**					
FRONT LADEN	**3700** *8159*	**4250** *9371*	**4800** *10584*	**5350** *11797*	**5800** *12789*	**6450** *14222*
REAR UNLADEN	**2950** *6505*	**3400** *7497*	**3850** *8489*	**4300** *9482*	**4650** *10253*	**5150** *11356*
Machine - Use (**kg** - *lbs*)	**GRADERS**					
ALL AXLES	**2325** *5127*	**2650** *5843*	**3000** *6615*			

COMMERCIAL DESCRIPTION	CAI *MSPN*	Max. dist./ hour **km** *mile*	TKPH [1] *TMPH*	e **mm** *inch*	D **mm** *inch*	R' **mm** *inch*	RC **mm** *inch*	Tread depth **mm** *32rd*	Dual Spacing **mm** *inch*	Cap. **liter** *gallon*	Measuring [2] [3] Recommended Rim	Other Approved [2] [3] Rims
XMINE D2 L5R * 15.5 R 25 Tubeless	**252905** *34827*	**6** *3.7*		**418** *16.5*	**1336** *52.6*	**609** *24*	**4049** *159.4*	**60** *75.6*		**215** *56.8*	**12.00/1.3**	12.00/1.3DC 13.00/1.4DC

Bar *Psi*	**2** *29*	**2.5** *36*	**3** *44*	**3.5** *51*	**4** *58*	**4.5** *65*
Machine - Use (**kg** - *lbs*)	**LOADERS**					
FRONT LADEN	**3700** *8159*	**4250** *9371*	**4800** *10584*	**5350** *11797*	**5800** *12789*	**6450** *14222*
REAR UNLADEN	**2950** *6505*	**3400** *7497*	**3850** *8489*	**4300** *9482*	**4650** *10253*	**5150** *11356*
Machine - Use (**kg** - *lbs*)	**GRADERS**					
ALL AXLES	**2325** *5127*	**2650** *5843*	**3000** *6615*			
Machine - Use (**kg** - *lbs*)	**UNDERGROUND MINE MACHINES**					
ALL AXLES	**3350** *7387*	**3850** *8489*	**4300** *9482*	**4800** *10584*	**5200** *11466*	**5800** *12789*

COMMERCIAL DESCRIPTION	CAI *MSPN*	Max. dist./ hour **km** *mile*	TKPH [1] *TMPH*	e **mm** *inch*	D **mm** *inch*	R' **mm** *inch*	RC **mm** *inch*	Tread depth **mm** *32rd*	Dual Spacing **mm** *inch*	Cap. **liter** *gallon*	Measuring [2] [3] Recommended Rim	Other Approved [2] [3] Rims
XTL A L2 * 15.5 R 25 Tubeless [5]	**123415** *94687*	**16** *9.9*		**397** *15.6*	**1272** *50.1*	**556** *21.9*	**3795** *149.4*	**26** *32.8*		**245** *64.7*	**12.00/1.3**	12.00/1.3DC 13.00/1.4DC

Bar *Psi*	**2** *29*	**2.5** *36*	**3** *44*	**3.5** *51*	**4** *58*	**4.5** *65*
Machine - Use (**kg** - *lbs*)	**LOADERS**					
FRONT LADEN	**3700** *8159*	**4250** *9371*	**4800** *10584*	**5350** *11797*	**5800** *12789*	**6450** *14222*
REAR UNLADEN	**2950** *6505*	**3400** *7497*	**3850** *8489*	**4300** *9482*	**4650** *10253*	**5150** *11356*
Machine - Use (**kg** - *lbs*)	**GRADERS**					
ALL AXLES	**2325** *5127*	**2650** *5843*	**3000** *6615*			

COMMERCIAL DESCRIPTION	CAI *MSPN*	Max. dist./ hour **km** *mile*	TKPH [1] *TMPH*	e **mm** *inch*	D **mm** *inch*	R' **mm** *inch*	RC **mm** *inch*	Tread depth **mm** *32rd*	Dual Spacing **mm** *inch*	Cap. **liter** *gallon*	Measuring [2] [3] Recommended Rim	Other Approved [2] [3] Rims
XH D1 A E4 ** 16.00 R 25 Tubeless	**123350** *34694*	**28** *17.4*	**164** *112*	**462** *18.2*	**1540** *60.6*	**704** *27.7*	**4672** *183.9*	**43** *54.2*	**564** *22.2*	**380** *100.4*	**11.25/2.0IN**	11.25/2.0 13.00/2.0IN 13.00/2.0

Bar *Psi*	**4** *58*	**4.5** *65*	**5** *73*	**5.5** *80*	**6** *87*	**6.5** *94*	**7** *102*	**7.5** *109*	**8** *116*
Machine - Use (**kg** - *lbs*)	**TRANSPORT**								
STANDARD	**5000** *11025*	**5450** *12017*	**5900** *13010*	**6400** *14112*	**6850** *15104*	**7300** *16097*	**7550** *16648*	**7750** *17089*	**8000** *17640*

TIRE LOAD IN KG/LB – TIRE PRESSURE IN BAR/PSI

COMMERCIAL DESCRIPTION	CAI *MSPN*	Max. dist./ hour **km** *mile*	TKPH [1] *TMPH*	e **mm** *inch*	D **mm** *inch*	R' **mm** *inch*	RC **mm** *inch*	Tread depth **mm** *32rd*	Dual Spacing **mm** *inch*	Cap. **liter** *gallon*	Measuring [2] [3] Recommended Rim	Other Approved [2] [3] Rims
XMINE D2 L5R 16.00 R 25 Tubeless	**261025** *34520*	**6** *3.7*		**457** *18*	**1530** *60.2*	**699** *27.5*	**4641** *182.7*	**73** *92*		**320** *84.5*	**11.25/2.0IN**	11.25/2.0 13.00/2.0IN 13.00/2.0

Bar *Psi*	**2** *29*	**3** *44*	**4** *58*	**5** *73*	**6** *87*	**7** *102*
Machine - Use (**kg** - *lbs*)	**LOADERS**					
FRONT LADEN	**4500** *9923*	**5800** *12789*	**7050** *15545*	**8350** *18412*	**9600** *21168*	**10900** *24035*
REAR UNLADEN	**3600** *7938*	**4650** *10253*	**5650** *12458*	**6700** *14774*	**7700** *16979*	**8700** *19184*
Machine - Use (**kg** - *lbs*)	**UNDERGROUND MINE MACHINES**					
ALL AXLES	**4050** *8930*	**5200** *11466*	**6350** *14002*	**7500** *16538*	**8650** *19073*	**9800** *21609*

COMMERCIAL DESCRIPTION	CAI *MSPN*	Max. dist./ hour **km** *mile*	TKPH [1] *TMPH*	e **mm** *inch*	D **mm** *inch*	R' **mm** *inch*	RC **mm** *inch*	Tread depth **mm** *32rd*	Dual Spacing **mm** *inch*	Cap. **liter** *gallon*	Measuring [2] [3] Recommended Rim	Other Approved [2] [3] Rims
XGC 170E 445/80 R 25 Tubeless	**264520** *30079*	**70** *43.5*		**446** *17.6*	**1352** *53.2*	**625** *24.6*	**4119** *162.2*	**28** *35.3*		**340** *89.8*	**14.00/1.7 CR**	14.00/1.5

Bar *Psi*	**5** *73*	**6** *87*	**7** *102*
Machine - Use (**kg** - *lbs*)	**CRANES AND SIMILAR SPECIALIZED MACHINES**		
30 KM/H *19 MPH*	**5650** *12458*	**6750** *14884*	**7800** *17199*
40 KM/H *25 MPH*	**5400** *11907*	**6450** *14222*	**7450** *16427*
50 KM/H *31 MPH*	**5150** *11356*	**6150** *13561*	**7100** *15656*
60 KM/H *37 MPH*	**5565** *12271*	**6030** *13296*	**6720** *14818*
65 KM/H *40 MPH*	**4650** *10253*	**5550** *12238*	**6450** *14222*
70 KM/H *43 MPH*	**4350** *9592*	**5200** *11466*	**6000** *13230*
80 KM/H *50 MPH*	**3600** *7938*	**4250** *9371*	**4950** *10915*
90 KM/H *56 MPH*	**3050** *6725*	**3650** *8048*	**4200** *9261*
100 KM/H *62 MPH*	**2650** *5843*	**3150** *6946*	**3600** *7938*

COMMERCIAL DESCRIPTION	CAI *MSPN*	Max. dist./ hour **km** *mile*	TKPH [1] *TMPH*	e **mm** *inch*	D **mm** *inch*	R' **mm** *inch*	RC **mm** *inch*	Tread depth **mm** *32rd*	Dual Spacing **mm** *inch*	Cap. **liter** *gallon*	Measuring [2] [3] Recommended Rim	Other Approved [2] [3] Rims
XSNOPLUS E2 177E 445/95 R 25 Tubeless	**123857** *20575*	**70** *43.5*		**447** *17.6*	**1486** *58.5*	**687** *27*	**4528** *178.3*	**25** *31.5*	**513** *20.2*	**380** *100.4*	**11.00/1.7 CR**	11.25/2.0IN 11.25/2.0 DC 635x280 CR

Bar *Psi*	**5** *73*	**6** *87*	**7** *102*	**8** *116*	**9** *131*
Machine - Use (**kg** - *lbs*)	**CRANES AND SIMILAR SPECIALIZED MACHINES**				
30 KM/H *20 MPH*	**5850** *12899*	**6750** *14884*	**7650** *16868*	**8600** *18963*	**9500** *20948*
40 KM/H *25 MPH*	**5600** *12348*	**6450** *14222*	**7300** *16097*	**8200** *18081*	**9050** *19955*
50 KM/H *31 MPH*	**5300** *11687*	**6150** *13561*	**6950** *15325*	**7800** *17199*	**8600** *18963*
65 KM/H *40 MPH*	**4850** *10694*	**5600** *12348*	**6350** *14002*	**7150** *15766*	**7800** *17199*
70 KM/H *43 MPH*	**4500** *9923*	**5200** *11466*	**5900** *13010*	**6600** *14553*	**7300** *16097*
80 KM/H *50 MPH*	**3700** *8159*	**4250** *9371*	**4850** *10694*	**5400** *11907*	**6000** *13230*
90 KM/H *56 MPH*	**3150** *6946*	**3650** *8048*	**4150** *9151*	**4600** *10143*	**5100** *11246*
100 KM/H *62 MPH*	**2700** *5954*	**3120** *6880*	**3550** *7828*	**3950** *8710*	**4400** *9702*

TIRE LOAD IN KG/LB – TIRE PRESSURE IN BAR/PSI

COMMERCIAL DESCRIPTION	CAI *MSPN*	Max. dist./ hour **km** *mile*	TKPH [1] *TMPH*	e **mm** *inch*	D **mm** *inch*	R' **mm** *inch*	RC **mm** *inch*	Tread depth **mm** *32rd*	Dual Spacing **mm** *inch*	Cap. **liter** *gallon*	Measuring [2] [3] Recommended Rim	Other Approved [2] [3] Rims
X-CRANE + 174F 445/95 R 25 Tubeless	**738428** *30097*	**80** *49.7*		**442** *17.4*	**1485** *58.5*	**693** *27.3*	**4542** *178.8*	**25** *31.5*		**380** *100.4*	**11.00/1.7 CR**	11.25/2.0IN 11.25/2.0 DC 635x280 CR
Bar *Psi*	**5** *73*	**6** *87*	**7** *102*	**8** *116*	**9** *131*							
Machine - Use (**kg** - *lbs*)	**CRANES AND SIMILAR SPECIALIZED MACHINES**											
30 KM/H *19 MPH*	**5340** *11775*	**6095** *13439*	**6850** *15104*	**7615** *16791*	**8375** *18467*							
40 KM/H *25 MPH*	**4910** *10827*	**5605** *12359*	**6300** *13892*	**7005** *15446*	**7705** *16990*							
50 KM/H *31 MPH*	**4780** *10540*	**5460** *12039*	**6140** *13539*	**6820** *15038*	**7505** *16549*							
65 KM/H *40 MPH*	**4590** *10121*	**5240** *11554*	**5890** *12987*	**6545** *14432*	**7205** *15887*							
70 KM/H *43 MPH*	**4485** *9889*	**5120** *11290*	**5755** *12690*	**6395** *14101*	**7035** *15512*							
80 KM/H *50 MPH*	**4270** *9415*	**4875** *10749*	**5480** *12083*	**6090** *13428*	**6700** *14774*							
90 KM/H *56 MPH*	**4015** *8853*	**4580** *10099*	**5150** *11356*	**5725** *12624*	**6300** *13892*							
100 KM/H *62 MPH*	**3775** *8324*	**4305** *9493*	**4840** *10672*	**5380** *11863*	**5920** *13054*							

COMMERCIAL DESCRIPTION	CAI *MSPN*	Max. dist./ hour **km** *mile*	TKPH [1] *TMPH*	e **mm** *inch*	D **mm** *inch*	R' **mm** *inch*	RC **mm** *inch*	Tread depth **mm** *32rd*	Dual Spacing **mm** *inch*	Cap. **liter** *gallon*	Measuring [2] [3] Recommended Rim	Other Approved [2] [3] Rims
XSNOPLUS L2T * TG 17.5 R 25 Tubeless	**123871** *99466*	**16** *9.9*		**448** *17.6*	**1342** *52.8*	**576** *22.7*	**3977** *156.6*	**28** *35.3*		**333** *88*	**14.00/1.5**	13.00/1.4DC 14.00/1.3DC 14.00/1.5DC
Bar *Psi*	**2** *29*	**2.5** *36*	**3** *44*	**3.5** *51*	**4.25** *62*	**4.5** *65*						
Machine - Use (**kg** - *lbs*)	**LOADERS**											
FRONT LADEN	**4550** *10033*	**5100** *11246*	**5700** *12569*	**6250** *13781*	**7100** *15656*	**7350** *16207*						
REAR UNLADEN	**3650** *8048*	**4100** *9041*	**4550** *10033*	**5000** *11025*	**5700** *12569*	**5900** *13010*						
Machine - Use (**kg** - *lbs*)	**GRADERS**											
ALL AXLES	**2800** *6174*	**3250** *7166*	**3650** *8048*									

COMMERCIAL DESCRIPTION	CAI *MSPN*	Max. dist./ hour **km** *mile*	TKPH [1] *TMPH*	e **mm** *inch*	D **mm** *inch*	R' **mm** *inch*	RC **mm** *inch*	Tread depth **mm** *32rd*	Dual Spacing **mm** *inch*	Cap. **liter** *gallon*	Measuring [2] [3] Recommended Rim	Other Approved [2] [3] Rims
XTL A L2 * 17.5 R 25 Tubeless [5]	**123425** *4118*	**16** *9.9*		**459** *18.1*	**1337** *52.6*	**574** *22.6*	**3964** *156.1*	**28** *35.3*		**332** *87.7*	**14.00/1.5**	14.00/1.3DC 14.00/1.5DC
Bar *Psi*	**2** *29*	**2.5** *36*	**3** *44*	**3.5** *51*	**4.25** *62*	**4.5** *65*						
Machine - Use (**kg** - *lbs*)	**LOADERS**											
FRONT LADEN	**4550** *10033*	**5100** *11246*	**5700** *12569*	**6250** *13781*	**7100** *15656*	**7350** *16207*						
REAR UNLADEN	**3650** *8048*	**4100** *9041*	**4550** *10033*	**5000** *11025*	**5700** *12569*	**5900** *13010*						
Machine - Use (**kg** - *lbs*)	**GRADERS**											
ALL AXLES	**2800** *6174*	**3250** *7166*	**3650** *8048*									

TIRE LOAD IN KG/LB – TIRE PRESSURE IN BAR/PSI

COMMERCIAL DESCRIPTION	CAI *MSPN*	Max. dist./ hour **km** *mile*	TKPH [1] *TMPH*	e **mm** *inch*	D **mm** *inch*	R' **mm** *inch*	RC **mm** *inch*	Tread depth **mm** *32rd*	Dual Spacing **mm** *inch*	Cap. **liter** *gallon*	Measuring [2] [3] Recommended Rim	Other Approved [2] [3] Rims
XHA2 L3 * 176A2 17.5 R 25 Tubeless	**717546** *48885*	**16** *9.9*		**459** *18.1*	**1342** *52.8*	**583** *23*	**3995** *157.3*	**29** *36.5*		**325** *85.9*	**14.00/1.5**	13.00/1.4DC 14.00/1.5DC
Bar *Psi*	**2** *29*	**2.5** *36*		**3** *44*	**3.5** *51*	**4.25** *62*	**4.5** *65*					
Machine - Use (**kg** - *lbs*)	**LOADERS**											
FRONT LADEN	**4550** *10033*	**5100** *11246*		**5700** *12569*	**6250** *13781*	**7100** *15656*	**7350** *16207*					
REAR UNLADEN	**3650** *8048*	**4100** *9041*		**4550** *10033*	**5000** *11025*	**5700** *12569*	**5900** *13010*					
Machine - Use (**kg** - *lbs*)	**GRADERS**											
ALL AXLES	**2800** *6174*	**3250** *7166*		**3650** *8048*								

COMMERCIAL DESCRIPTION	CAI *MSPN*	Max. dist./ hour **km** *mile*	TKPH [1] *TMPH*	e **mm** *inch*	D **mm** *inch*	R' **mm** *inch*	RC **mm** *inch*	Tread depth **mm** *32rd*	Dual Spacing **mm** *inch*	Cap. **liter** *gallon*	Measuring [2] [3] Recommended Rim	Other Approved [2] [3] Rims
XK A L3 ** 17.5 R 25 Tubeless	**263251** *44735*	**14** *8.7*		**481** *18.9*	**1346** *53*	**600** *23.6*	**4045** *159.3*	**25** *31.5*		**300** *79.3*	**14.00/1.5**	
Bar *Psi*	**2** *29*	**2.5** *36*		**3** *44*	**3.5** *51*	**4.25** *62*	**4.5** *65*	**5** *73*	**5.5** *80*			
Machine - Use (**kg** - *lbs*)	**LOADERS**											
FRONT LADEN	**4550** *10033*	**5100** *11246*		**5700** *12569*	**6250** *13781*	**7100** *15656*	**7350** *16207*	**7925** *17475*	**8500** *18743*			
REAR UNLADEN	**3650** *8048*	**4100** *9041*		**4550** *10033*	**5000** *11025*	**5700** *12569*	**5900** *13010*	**6350** *14002*	**6800** *14994*			
Machine - Use (**kg** - *lbs*)	**UNDERGROUND TRANSPORT MACHINE**											
ALL AXLES				**4250** *9371*	**4750** *10474*	**5600** *12348*	**5800** *12789*	**6300** *13892*	**6700** *14774*			

COMMERCIAL DESCRIPTION	CAI *MSPN*	Max. dist./ hour **km** *mile*	TKPH [1] *TMPH*	e **mm** *inch*	D **mm** *inch*	R' **mm** *inch*	RC **mm** *inch*	Tread depth **mm** *32rd*	Dual Spacing **mm** *inch*	Cap. **liter** *gallon*	Measuring [2] [3] Recommended Rim	Other Approved [2] [3] Rims
XLD D2 A L5T * 17.5 R 25 Tubeless	**123317** *37608*	**10** *6.2*		**454** *17.9*	**1406** *55.4*	**619** *24.4*	**4206** *165.6*	**63** *79.4*		**305** *80.6*	**14.00/1.5**	
Bar *Psi*	**2** *29*	**2.5** *36*		**3** *44*	**3.5** *51*	**4.25** *62*	**4.5** *65*	**5** *73*	**5.5** *80*			
Machine - Use (**kg** - *lbs*)	**LOADERS**											
FRONT LADEN	**4550** *10033*	**5100** *11246*		**5700** *12569*	**6250** *13781*	**7100** *15656*	**7350** *16207*					
REAR UNLADEN	**3650** *8048*	**4100** *9041*		**4550** *10033*	**5000** *11025*	**5700** *12569*	**5900** *13010*					
Machine - Use (**kg** - *lbs*)	**GRADERS**											
ALL AXLES	**2800** *6174*	**3250** *7166*		**3650** *8048*								
Machine - Use (**kg** - *lbs*)	**UNDERGROUND TRANSPORT MACHINE**											
ALL AXLES				**4250** *9371*	**4750** *10474*	**5600** *12348*	**5800** *12789*	**6300** *13892*	**6700** *14774*			

TIRE LOAD IN KG/LB – TIRE PRESSURE IN BAR/PSI

COMMERCIAL DESCRIPTION	CAI *MSPN*	Max. dist./ hour **km** *mile*	TKPH [1] *TMPH*	e **mm** *inch*	D **mm** *inch*	R' **mm** *inch*	RC **mm** *inch*	Tread depth **mm** *32rd*	Dual Spacing **mm** *inch*	Cap. **liter** *gallon*	Measuring [2] [3] Recommended Rim	Other Approved [2] [3] Rims
XMINE D2 L5 ** 17.5 R 25 Tubeless	009071 *31686*	6 *3.7*		480 *18.9*	1402 *55.2*	641 *25.2*	4254 *167.5*	65 *81.9*		285 *75.3*	14.00/1.5	14.00/1.5DC
Bar *Psi*	3 *44*	3.5 *51*		4 *58*	4.5 *65*	5 *73*	5.5 *80*	6 *87*	6.5 *94*			
Machine - Use (**kg** - *lbs*)	**LOADERS**											
FRONT LADEN	4750 *10474*	5450 *12017*	6000 *13230*	6500 *14333*	7100 *15656*	7500 *16538*	8000 *17640*	8500 *18743*				
REAR UNLADEN	3800 *8379*	4360 *9614*	4800 *10584*	5200 *11466*	5680 *12524*	6000 *13230*	6400 *14112*	6800 *14994*				
Machine - Use (**kg** - *lbs*)	**UNDERGROUND TRANSPORT MACHINE**											
ALL AXLES	4250 *9371*	4750 *10474*	5300 *11687*	5800 *12789*	6300 *13892*	6700 *14774*	7100 *15656*	7500 *16538*				

COMMERCIAL DESCRIPTION	CAI *MSPN*	Max. dist./ hour **km** *mile*	TKPH [1] *TMPH*	e **mm** *inch*	D **mm** *inch*	R' **mm** *inch*	RC **mm** *inch*	Tread depth **mm** *32rd*	Dual Spacing **mm** *inch*	Cap. **liter** *gallon*	Measuring [2] [3] Recommended Rim	Other Approved [2] [3] Rims
XSM D2+ L5S ** 17.5 R 25 Tubeless	218365 *41235*	4 *2.5*		456 *18*	1397 *55*	641 *25.2*	4246 *167.2*	78 *98.3*		272 *71.9*	14.00/1.5	
Bar *Psi*	3 *44*	3.5 *51*		4 *58*	4.5 *65*	5 *73*	5.5 *80*	6 *87*	6.5 *94*			
Machine - Use (**kg** - *lbs*)	**LOADERS**											
FRONT LADEN	4750 *10474*	5450 *12017*	6000 *13230*	6500 *14333*	7100 *15656*	7500 *16538*	8000 *17640*	8500 *18743*				
REAR UNLADEN	3800 *8379*	4360 *9614*	4800 *10584*	5200 *11466*	5680 *12524*	6000 *13230*	6400 *14112*	6800 *14994*				

COMMERCIAL DESCRIPTION	CAI *MSPN*	Max. dist./ hour **km** *mile*	TKPH [1] *TMPH*	e **mm** *inch*	D **mm** *inch*	R' **mm** *inch*	RC **mm** *inch*	Tread depth **mm** *32rd*	Dual Spacing **mm** *inch*	Cap. **liter** *gallon*	Measuring [2] [3] Recommended Rim	Other Approved [2] [3] Rims
XSMD2+ PRO L5S * 17.5 R 25 Tubeless**	822869 *33183*	4 *2.5*		453 *17.8*	1396 *55*	635 *25*	4227 *166.4*	78 *98.3*		272 *71.9*	14.00/1.5	
Bar *Psi*	3 *44*	3.5 *51*		4 *58*	4.5 *65*	5 *73*	5.5 *80*	6 *87*	6.5 *94*	7 *102*		
Machine - Use (**kg** - *lbs*)	**LOADERS**											
FRONT LADEN	4750 *10474*	5450 *12017*	6000 *13230*	6500 *14333*	7100 *15656*	7500 *16538*	8000 *17640*	8500 *18743*	10000 *22050*			
REAR UNLADEN	3800 *8379*	4360 *9614*	4800 *10584*	5200 *11466*	5680 *12524*	6000 *13230*	6400 *14112*	6800 *14994*	8000 *17640*			

COMMERCIAL DESCRIPTION	CAI *MSPN*	Max. dist./ hour **km** *mile*	TKPH [1] *TMPH*	e **mm** *inch*	D **mm** *inch*	R' **mm** *inch*	RC **mm** *inch*	Tread depth **mm** *32rd*	Dual Spacing **mm** *inch*	Cap. **liter** *gallon*	Measuring [2] [3] Recommended Rim	Other Approved [2] [3] Rims
XMINE D2 PRO L5 * 17.5 R 25 Tubeless**	720557 *01143*	6 *3.7*		477 *18.8*	1404 *55.3*	627 *24.7*	4222 *166.2*	65 *81.9*		285 *75.3*	14.00/1.5	14.00/1.5DC
Bar *Psi*	3 *44*	3.5 *51*		4 *58*	4.5 *65*	5 *73*	5.5 *80*	6 *87*	6.5 *94*	7 *102*		
Machine - Use (**kg** - *lbs*)	**LOADERS**											
FRONT LADEN	4750 *10474*	5450 *12017*	6000 *13230*	6500 *14333*	7100 *15656*	7500 *16538*	8000 *17640*	8500 *18743*	10000 *22050*			
REAR UNLADEN	3800 *8379*	4360 *9614*	4800 *10584*	5200 *11466*	5680 *12524*	6000 *13230*	6400 *14112*	6800 *14994*	8000 *17640*			
Machine - Use (**kg** - *lbs*)	**UNDERGROUND TRANSPORT MACHINE**											
ALL AXLES	4250 *9371*	4750 *10474*	5300 *11687*	5800 *12789*	6300 *13892*	6700 *14774*	7100 *15656*	7500 *16538*	9000 *19845*			

TIRE LOAD IN KG/LB – TIRE PRESSURE IN BAR/PSI

COMMERCIAL DESCRIPTION	CAI *MSPN*	Max. dist./ hour **km** *mile*	TKPH [1] *TMPH*	e **mm** *inch*	D **mm** *inch*	R' **mm** *inch*	RC **mm** *inch*	Tread depth **mm** *32rd*	Dual Spacing **mm** *inch*	Cap. **liter** *gallon*	Measuring [2] [3] Recommended Rim	Other Approved [2] [3] Rims
XS E7 18.00 R 25 Tubeless [9]	**276450** *46284*			**492** *19.4*	**1600** *63*	**722** *28.4*	**4831** *190.2*	**21** *26.5*	**641** *25.2*	**532** *140.6*	**13.00/2.5IN**	13.00/2.5 15.00/2.5IN 15.00/2.5
Bar *Psi*	**1** *15*	**1.5** *22*		**2** *29*	**2.5** *36*	**3** *44*	**3.5** *51*	**4** *58*	**4.5** *65*	**5** *73*	**6** *87*	
Machine - Use (**kg** - *lbs*)	**DESERT CONDITIONS 65 KM/H MAX.**											
ROAD IN SINGLE				**3250** *7166*	**3900** *8600*	**4500** *9923*	**5050** *11135*	**5600** *12348*	**6250** *13781*	**6850** *15104*	**8000** *17640*	
ROAD IN TWIN				**2925** *6450*	**3510** *7740*	**4050** *8930*	**4545** *10022*	**5040** *11113*	**5625** *12403*	**6165** *13594*	**7200** *15876*	
TRACK IN SINGLE				**3250** *7166*	**4050** *8930*	**4950** *10915*	**5750** *12679*	**6600** *14553*				
TRACK IN TWIN				**2925** *6450*	**3645** *8037*	**4455** *9823*	**5175** *11411*	**5940** *13098*				
SAND IN SINGLE	**3600** *7938*	**5050** *11135*		**6350** *14002*								
SAND IN TWIN	**3240** *7144*	**4545** *10022*		**5715** *12602*								

COMMERCIAL DESCRIPTION	CAI *MSPN*	Max. dist./ hour **km** *mile*	TKPH [1] *TMPH*	e **mm** *inch*	D **mm** *inch*	R' **mm** *inch*	RC **mm** *inch*	Tread depth **mm** *32rd*	Dual Spacing **mm** *inch*	Cap. **liter** *gallon*	Measuring [2] [3] Recommended Rim	Other Approved [2] [3] Rims
XK D1 A E4 ** 18.00 R 25 Tubeless	**270680** *12336*	**18** *11.2*	**133** *91*	**530** *20.9*	**1668** *65.7*	**764** *30.1*	**5064** *199.4*	**47** *59.2*	**598** *23.5*	**495** *130.8*	**13.00/2.5IN**	13.00/2.5 15.00/2.5IN 15.00/2.5
Bar *Psi*	**4** *58*	**4.25** *62*		**4.5** *65*	**5** *73*	**6** *87*		**7** *102*	**7.5** *109*			
Machine - Use (**kg** - *lbs*)	**TRANSPORT**											
STANDARD	**6800** *14994*	**7100** *15656*		**7400** *16317*	**8000** *17640*	**9250** *20396*		**9850** *21719*	**10150** *22381*			

COMMERCIAL DESCRIPTION	CAI *MSPN*	Max. dist./ hour **km** *mile*	TKPH [1] *TMPH*	e **mm** *inch*	D **mm** *inch*	R' **mm** *inch*	RC **mm** *inch*	Tread depth **mm** *32rd*	Dual Spacing **mm** *inch*	Cap. **liter** *gallon*	Measuring [2] [3] Recommended Rim	Other Approved [2] [3] Rims
XHDT A E4 18.00 R 25 Tubeless	**199475** *18573*	**23** *14.3*	**170** *116*	**496** *19.5*	**1621** *63.8*	**732** *28.8*	**4896** *192.8*	**47** *59.2*	**587** *23.1*	**513** *135.5*	**13.00/2.5IN**	13.00/2.5 15.00/2.5IN 15.00/2.5
Bar *Psi*	**4** *58*	**4.25** *62*		**4.5** *65*	**5** *73*	**6** *87*		**7** *102*	**7.5** *109*			
Machine - Use (**kg** - *lbs*)	**TRANSPORT**											
STANDARD	**6800** *14994*	**7100** *15656*		**7400** *16317*	**8000** *17640*	**9250** *20396*		**9850** *21719*	**10150** *22381*			

COMMERCIAL DESCRIPTION	CAI *MSPN*	Max. dist./ hour **km** *mile*	TKPH [1] *TMPH*	e **mm** *inch*	D **mm** *inch*	R' **mm** *inch*	RC **mm** *inch*	Tread depth **mm** *32rd*	Dual Spacing **mm** *inch*	Cap. **liter** *gallon*	Measuring [2] [3] Recommended Rim	Other Approved [2] [3] Rims
XHDT B E4 18.00 R 25 Tubeless	**714571** *23787*	**30** *18.6*	**222** *152*	**496** *19.5*	**1621** *63.8*	**732** *28.8*	**4896** *192.8*	**47** *59.2*	**587** *23.1*	**513** *135.5*	**13.00/2.5IN**	13.00/2.5 15.00/2.5IN 15.00/2.5
Bar *Psi*	**4** *58*	**4.25** *62*		**4.5** *65*	**5** *73*	**6** *87*		**7** *102*	**7.5** *109*			
Machine - Use (**kg** - *lbs*)	**TRANSPORT**											
STANDARD	**6800** *14994*	**7100** *15656*		**7400** *16317*	**8000** *17640*	**9250** *20396*		**9850** *21719*	**10150** *22381*			

TIRE LOAD IN KG/LB – TIRE PRESSURE IN BAR/PSI

COMMERCIAL DESCRIPTION	CAI *MSPN*	Max. dist./ hour **km** *mile*	TKPH [1] *TMPH*	e **mm** *inch*	D **mm** *inch*	R' **mm** *inch*	RC **mm** *inch*	Tread depth **mm** *32rd*	Dual Spacing **mm** *inch*	Cap. **liter** *gallon*	Measuring [2] [3] Recommended Rim	Other Approved [2] [3] Rims
XMINE D2 L5 ** 18.00 R 25 Tubeless	**391927** *31984*	**6** *3.7*		**536** *21.1*	**1656** *65.2*	**736** *29*	**4971** *195.7*	**82** *103.3*		**460** *121.5*	**13.00/2.5IN**	13.00/2.5 15.00/2.5IN 15.00/2.5
Bar *Psi*	**4** *58*	**4.5** *65*		**5** *73*	**5.5** *80*	**6** *87*	**7** *102*	**7.5** *109*	**8** *116*	**8.25** *120*		
Machine - Use (**kg** - *lbs*)	**LOADER**											
FRONT LADEN	**9250** *20396*	**10000** *22050*		**10900** *24035*	**11800** *26019*	**12500** *27563*	**14000** *30870*	**15000** *33075*	**15550** *34288*	**16000** *35280*		
REAR UNLADEN	**7400** *16317*	**8000** *17640*		**8720** *19228*	**9450** *20837*	**10000** *22050*	**11200** *24696*	**12000** *26460*	**12450** *27452*	**12800** *28224*		
Machine - Use (**kg** - *lbs*)	**UNDERGROUND TRANSPORT MACHINE**											
ALL AXLES	**8250** *18191*	**9000** *19845*		**9750** *21499*	**10600** *23373*	**11200** *24696*	**12500** *27563*	**13200** *29106*	**14000** *30870*	**14200** *31311*		

COMMERCIAL DESCRIPTION	CAI *MSPN*	Max. dist./ hour **km** *mile*	TKPH [1] *TMPH*	e **mm** *inch*	D **mm** *inch*	R' **mm** *inch*	RC **mm** *inch*	Tread depth **mm** *32rd*	Dual Spacing **mm** *inch*	Cap. **liter** *gallon*	Measuring [2] [3] Recommended Rim	Other Approved [2] [3] Rims
XSM D2+ L5S ** 18.00 R 25 Tubeless	**686348** *41606*	**4** *2.5*		**507** *20*	**1655** *65.2*	**743** *29.3*	**4988** *196.4*	**96** *120.9*		**440** *116.2*	**13.00/2.5IN**	13.00/2.5 15.00/2.5IN 15.00/2.5
Bar *Psi*	**4** *58*	**4.5** *65*		**5** *73*	**5.5** *80*	**6** *87*	**7** *102*	**7.5** *109*	**8** *116*	**8.25** *120*		
Machine - Use (**kg** - *lbs*)	**LOADER**											
FRONT LADEN	**9250** *20396*	**10000** *22050*		**10900** *24035*	**11800** *26019*	**12500** *27563*	**14000** *30870*	**15000** *33075*	**15550** *34288*	**16000** *35280*		
REAR UNLADEN	**7400** *16317*	**8000** *17640*		**8720** *19228*	**9450** *20837*	**10000** *22050*	**11200** *24696*	**12000** *26460*	**12450** *27452*	**12800** *28224*		

COMMERCIAL DESCRIPTION	CAI *MSPN*	Max. dist./ hour **km** *mile*	TKPH [1] *TMPH*	e **mm** *inch*	D **mm** *inch*	R' **mm** *inch*	RC **mm** *inch*	Tread depth **mm** *32rd*	Dual Spacing **mm** *inch*	Cap. **liter** *gallon*	Measuring [2] [3] Recommended Rim	Other Approved [2] [3] Rims
XSM D2+ LC L5S ** 18.00 R 25 Tubeless	**694482** *32651*	**6** *3.7*		**509** *20*	**1612** *63.5*	**723** *28.5*	**4856** *191.2*	**78** *98.3*		**437** *115.5*	**13.00/2.5IN**	13.00/2.5 15.00/2.5IN 15.00/2.5
Bar *Psi*	**4** *58*	**4.5** *65*		**5** *73*	**5.5** *80*	**6** *87*	**7** *102*	**7.5** *109*	**8** *116*	**8.25** *120*		
Machine - Use (**kg** - *lbs*)	**LOADER**											
FRONT LADEN	**9250** *20396*	**10000** *22050*		**10900** *24035*	**11800** *26019*	**12500** *27563*	**14000** *30870*	**15000** *33075*	**15550** *34288*	**16000** *35280*		
REAR UNLADEN	**7400** *16317*	**8000** *17640*		**8720** *19228*	**9450** *20837*	**10000** *22050*	**11200** *24696*	**12000** *26460*	**12450** *27452*	**12800** *28224*		

COMMERCIAL DESCRIPTION	CAI *MSPN*	Max. dist./ hour **km** *mile*	TKPH [1] *TMPH*	e **mm** *inch*	D **mm** *inch*	R' **mm** *inch*	RC **mm** *inch*	Tread depth **mm** *32rd*	Dual Spacing **mm** *inch*	Cap. **liter** *gallon*	Measuring [2] [3] Recommended Rim	Other Approved [2] [3] Rims
XMINE D2 PRO L5 * 18.00 R 25 Tubeless**	**153322** *08541*	**6** *3.7*		**532** *20.9*	**1665** *65.6*	**737** *29*	**4992** *196.5*	**82** *103.3*		**460** *121.5*	**13.00/2.5IN**	13.00/2.5 15.00/2.5IN 15.00/2.5
Bar *Psi*	**4** *58*	**4.5** *65*		**5** *73*	**5.5** *80*	**6** *87*	**7** *102*	**7.5** *109*	**8** *116*	**8.25** *120*	**8.5** *123*	
Machine - Use (**kg** - *lbs*)	**LOADERS**											
FRONT LADEN	**9250** *20396*	**10000** *22050*		**10900** *24035*	**11800** *26019*	**12500** *27563*	**14000** *30870*	**15000** *33075*	**15550** *34288*	**16000** *35280*	**17000** *37485*	
REAR UNLADEN	**7400** *16317*	**8000** *17640*		**8720** *19228*	**9440** *20815*	**10000** *22050*	**11200** *24696*	**12000** *26460*	**12440** *27430*	**12800** *28224*	**13600** *29988*	
Machine - Use (**kg** - *lbs*)	**UNDERGROUND TRANSPORT MACHINE**											
ALL AXLES	**8250** *18191*	**9000** *19845*		**9750** *21499*	**10600** *23373*	**11200** *24696*	**12500** *27563*	**13200** *29106*	**14000** *30870*	**14200** *31311*	**15000** *33075*	

TIRE LOAD IN KG/LB – TIRE PRESSURE IN BAR/PSI

COMMERCIAL DESCRIPTION	CAI *MSPN*	Max. dist./ hour **km** *mile*	**TKPH** [1] *TMPH*	e **mm** *inch*	D **mm** *inch*	R' **mm** *inch*	RC **mm** *inch*	Tread depth **mm** *32rd*	Dual Spacing **mm** *inch*	Cap. **liter** *gallon*	Measuring [2] [3] Recommended Rim	Other Approved [2] [3] Rims
XSMD2+ PRO L5S * 18.00 R 25 Tubeless**	**003438** *57386*	**4** *2.5*		**508** *20*	**1653** *65.1*	**738** *29.1*	**4972** *195.7*	**96** *120.9*		**440** *116.2*	**13.00/2.5IN**	13.00/2.5 15.00/2.5IN 15.00/2.5

Bar *Psi*	**4** *58*	**4.5** *65*	**5** *73*	**5.5** *80*	**6** *87*	**7** *102*	**7.5** *109*	**8** *116*	**8.25** *120*	**8.5** *123*
Machine - Use (**kg** - *lbs*)	**LOADERS**									
FRONT LADEN	**9250** *20396*	**10000** *22050*	**10900** *24035*	**11800** *26019*	**12500** *27563*	**14000** *30870*	**15000** *33075*	**15550** *34288*	**16000** *35280*	**17000** *37485*
REAR UNLADEN	**7400** *16317*	**8000** *17640*	**8720** *19228*	**9440** *20815*	**10000** *22050*	**11200** *24696*	**12000** *26460*	**12440** *27430*	**12800** *28224*	**13600** *29988*

COMMERCIAL DESCRIPTION	CAI *MSPN*	Max. dist./ hour **km** *mile*	**TKPH** [1] *TMPH*	e **mm** *inch*	D **mm** *inch*	R' **mm** *inch*	RC **mm** *inch*	Tread depth **mm** *32rd*	Dual Spacing **mm** *inch*	Cap. **liter** *gallon*	Measuring [2] [3] Recommended Rim	Other Approved [2] [3] Rims
XVC 183E 505/95 R 25 Tubeless [9]	**565628** *67579*	**50** *31.1*	**284** *195*	**498** *19.6*	**1610** *63.4*	**743** *29.3*	**4902** *193*	**26** *32.8*		**576** *152.2*	**13.00/2.5IN**	13.00/2.5 10.0/2.0 15.00/2.5IN 15.00/2.5

Bar *Psi*	**5** *73*	**6** *87*	**7** *102*	**8** *116*	**9** *131*				
Machine - Use (**kg** - *lbs*)	**CRANES AND SIMILAR SPECIALIZED MACHINES**								
30 KM/H *19 MPH*	**6435** *14189*	**7670** *16912*	**8905** *19636*	**10140** *22359*	**11375** *25082*				
40 KM/H *25 MPH*	**6140** *13539*	**7315** *16130*	**8495** *18731*	**9670** *21322*	**10850** *23924*				
50 KM/H *31 MPH*	**5840** *12877*	**6960** *15347*	**8085** *17827*	**9205** *20297*	**10325** *22767*				
60 KM/H *37 MPH*	**5545** *12227*	**6610** *14575*	**7670** *16912*	**8730** *19250*	**9800** *21609*				
65 KM/H *40 MPH*	**5245** *11565*	**6255** *13792*	**7260** *16008*	**8270** *18235*	**9275** *20451*				
70 KM/H *43 MPH*	**4950** *10915*	**5900** *13010*	**6850** *15104*	**7800** *17199*	**8750** *19294*				
80 KM/H *50 MPH*	**4060** *8952*	**4840** *10672*	**5615** *12381*	**6390** *14090*	**7175** *15821*				
90 KM/H *56 MPH*	**3465** *7640*	**4130** *9107*	**4795** *10573*	**5460** *12039*	**6125** *13506*				
100 KM/H *62 MPH*	**2970** *6549*	**3540** *7806*	**4110** *9063*	**4680** *10319*	**5250** *11576*				

COMMERCIAL DESCRIPTION	CAI *MSPN*	Max. dist./ hour **km** *mile*	**TKPH** [1] *TMPH*	e **mm** *inch*	D **mm** *inch*	R' **mm** *inch*	RC **mm** *inch*	Tread depth **mm** *32rd*	Dual Spacing **mm** *inch*	Cap. **liter** *gallon*	Measuring [2] [3] Recommended Rim	Other Approved [2] [3] Rims
XADN E3T ** 177B 20.5 R 25 Tubeless	**123407** *23290*	**28** *17.4*	**164** *112*	**528** *20.8*	**1490** *58.7*	**667** *26.3*	**4485** *176.6*	**36** *45.4*		**474** *125.2*	**17.00/2.0**	

Bar *Psi*	**2** *29*	**2.5** *36*	**3** *44*	**3.5** *51*	**4** *58*	**4.25** *62*	**4.5** *65*
Machine - Use (**kg** - *lbs*)	**ARTICULATED DUMP TRUCKS**						
STANDARD	**4750** *10474*	**5250** *11576*	**5750** *12679*	**6250** *13781*	**6800** *14994*	**7050** *15545*	**7300** *16097*

COMMERCIAL DESCRIPTION	CAI *MSPN*	Max. dist./ hour **km** *mile*	**TKPH** [1] *TMPH*	e **mm** *inch*	D **mm** *inch*	R' **mm** *inch*	RC **mm** *inch*	Tread depth **mm** *32rd*	Dual Spacing **mm** *inch*	Cap. **liter** *gallon*	Measuring [2] [3] Recommended Rim	Other Approved [2] [3] Rims
XSNOPLUS L2T * 20.5 R 25 Tubeless	**123795** *62408*	**16** *9.9*		**534** *21*	**1471** *57.9*	**632** *24.9*	**4362** *171.7*	**31** *39.1*		**500** *132.1*	**17.00/1.7**	17.00/2.0

Bar *Psi*	**2** *29*	**2.5** *36*	**3** *44*	**3.5** *51*	**4.25** *62*	**4.5** *65*	
Machine - Use (**kg** - *lbs*)	**LOADERS**						
FRONT LADEN	**6250** *13781*	**7000** *15435*	**7700** *16979*	**8400** *18522*	**9500** *20948*	**9900** *21830*	
REAR UNLADEN	**5000** *11025*	**5600** *12348*	**6150** *13561*	**6700** *14774*	**7600** *16758*	**7900** *17420*	
Machine - Use (**kg** - *lbs*)	**GRADERS**						
ALL AXLES	**3600** *7938*	**4125** *9096*	**4625** *10198*				

TIRE LOAD IN KG/LB – TIRE PRESSURE IN BAR/PSI

COMMERCIAL DESCRIPTION	CAI *MSPN*	Max. dist./ hour **km** *mile*	TKPH [1] *TMPH*	e **mm** *inch*	D **mm** *inch*	R' **mm** *inch*	RC **mm** *inch*	Tread depth **mm** *32rd*	Dual Spacing **mm** *inch*	Cap. **liter** *gallon*	Measuring [2] [3] Recommended Rim	Other Approved [2] [3] Rims
XTL A L2 * 20.5 R 25 Tubeless [5]	**123435** *09122*	**16** *9.9*		**532** *20.9*	**1480** *58.3*	**637** *25.1*	**4391** *172.9*	**31** *39.1*		**500** *132.1*	**17.00/1.7**	17.00/2.0

Bar *Psi*	**2** *29*	**2.5** *36*	**3** *44*	**3.5** *51*	**4.25** *62*	**4.5** *65*
Machine - Use (**kg** - *lbs*)	**LOADERS**					
FRONT LADEN	**6250** *13781*	**7000** *15435*	**7700** *16979*	**8400** *18522*	**9500** *20948*	**9900** *21830*
REAR UNLADEN	**5000** *11025*	**5600** *12348*	**6150** *13561*	**6700** *14774*	**7600** *16758*	**7900** *17420*
Machine - Use (**kg** - *lbs*)	**GRADERS**					
ALL AXLES	**3600** *7938*	**4125** *9096*	**4625** *10198*			

COMMERCIAL DESCRIPTION	CAI *MSPN*	Max. dist./ hour **km** *mile*	TKPH [1] *TMPH*	e **mm** *inch*	D **mm** *inch*	R' **mm** *inch*	RC **mm** *inch*	Tread depth **mm** *32rd*	Dual Spacing **mm** *inch*	Cap. **liter** *gallon*	Measuring [2] [3] Recommended Rim	Other Approved [2] [3] Rims
XHA2 L3 * 186A2 20.5 R 25 Tubeless	**899613** *84298*	**16** *9.9*		**528** *20.8*	**1486** *58.5*	**644** *25.4*	**4420** *174*	**33** *41.6*		**489** *129.2*	**17.00/1.7**	17.00/2.0

Bar *Psi*	**2** *29*	**2.5** *36*	**3** *44*	**3.5** *51*	**4.25** *62*	**4.5** *65*
Machine - Use (**kg** - *lbs*)	**LOADERS**					
FRONT LADEN	**6250** *13781*	**7000** *15435*	**7700** *16979*	**8400** *18522*	**9500** *20948*	**9900** *21830*
REAR UNLADEN	**5000** *11025*	**5600** *12348*	**6150** *13561*	**6700** *14774*	**7600** *16758*	**7900** *17420*
Machine - Use (**kg** - *lbs*)	**GRADERS**					
ALL AXLES	**3600** *7938*	**4125** *9096*	**4625** *10198*			

COMMERCIAL DESCRIPTION	CAI *MSPN*	Max. dist./ hour **km** *mile*	TKPH [1] *TMPH*	e **mm** *inch*	D **mm** *inch*	R' **mm** *inch*	RC **mm** *inch*	Tread depth **mm** *32rd*	Dual Spacing **mm** *inch*	Cap. **liter** *gallon*	Measuring [2] [3] Recommended Rim	Other Approved [2] [3] Rims
XK A L3 ** 20.5 R 25 Tubeless	**263460** ***01565***	**14** *8.7*		**560** *22*	**1486** *58.5*	**655** *25.8*	**4447** *175.1*	**28** *35.3*		**485** *128.1*	**17.00/1.7 17.00/2.0**	

Bar *Psi*	**2** *29*	**2.5** *36*	**3** *44*	**3.5** *51*	**4.25** *62*	**4.5** *65*	**5** *73*	**5.5** *80*
Machine - Use (**kg** - *lbs*)	**LOADER**							
FRONT LADEN	**6250** *13781*	**7000** *15435*	**7700** *16979*	**8400** *18522*	**9500** *20948*	**9900** *21830*	**10700** *23594*	**11500** *25358*
REAR UNLADEN	**5000** *11025*	**5600** *12348*	**6150** *13561*	**6700** *14774*	**7600** *16758*	**7900** *17420*	**8550** *18853*	**9180** *20242*
Machine - Use (**kg** - *lbs*)	**UNDERGROUND TRANSPORT MACHINE**							
ALL AXLES			**5600** *12348*	**6300** *13892*	**7300** *16097*	**7750** *17089*	**8250** *18191*	**9000** *19845*

COMMERCIAL DESCRIPTION	CAI *MSPN*	Max. dist./ hour **km** *mile*	TKPH [1] *TMPH*	e **mm** *inch*	D **mm** *inch*	R' **mm** *inch*	RC **mm** *inch*	Tread depth **mm** *32rd*	Dual Spacing **mm** *inch*	Cap. **liter** *gallon*	Measuring [2] [3] Recommended Rim	Other Approved [2] [3] Rims
XLD D2 A L5T * 20.5 R 25 Tubeless	**123325** *79084*	**10** *6.2*		**534** *21*	**1530** *60.2*	**674** *26.5*	**4578** *180.2*	**72** *90.7*		**427** *112.8*	**17.00/1.7**	17.00/2.0

Bar *Psi*	**2** *29*	**2.5** *36*	**3** *44*	**3.5** *51*	**4.25** *62*	**4.5** *65*	**5** *73*	**5.5** *80*
Machine - Use (**kg** - *lbs*)	**LOADERS**							
FRONT LADEN	**6250** *13781*	**7000** *15435*	**7700** *16979*	**8400** *18522*	**9500** *20948*	**9900** *21830*		
REAR UNLADEN	**5000** *11025*	**5600** *12348*	**6150** *13561*	**6700** *14774*	**7600** *16758*	**7900** *17420*		
Machine - Use (**kg** - *lbs*)	**GRADERS**							
ALL AXLES	**3600** *7938*	**4125** *9096*	**4625** *10198*					
Machine - Use (**kg** - *lbs*)	**UNDERGROUND TRANSPORT MACHINE**							
ALL AXLES			**5600** *12348*	**6300** *13892*	**7300** *16097*	**7750** *17089*	**8250** *18191*	**9000** *19845*

TIRE LOAD IN KG/LB – TIRE PRESSURE IN BAR/PSI

COMMERCIAL DESCRIPTION	CAI *MSPN*	Max. dist./ hour **km** *mile*	TKPH [1] *TMPH*	e **mm** *inch*	D **mm** *inch*	R' **mm** *inch*	RC **mm** *inch*	Tread depth **mm** *32rd*	Dual Spacing **mm** *inch*	Cap. **liter** *gallon*	Measuring [2] [3] Recommended Rim	Other Approved [2] [3] Rims
XMINE D2 L5 ** 20.5 R 25 Tubeless	**353968** *43492*	**6** *3.7*		**562** *22.1*	**1535** *60.4*	**701** *27.6*	**4656** *183.3*	**74** *93.2*		**447** *118.1*	**17.00/1.7 17.00/2.0**	
Bar *Psi*	**3** *44*	**3.5** *51*		**4** *58*	**4.5** *65*	**5** *73*	**5.5** *80*	**6** *87*	**6.5** *94*			
Machine - Use (**kg** - *lbs*)	**LOADERS**											
FRONT LADEN	**6300** *13892*	**7100** *15656*		**8000** *17640*	**8750** *19294*	**9500** *20948*	**10000** *22050*	**10900** *24035*	**11500** *25358*			
REAR UNLADEN	**5040** *11113*	**5680** *12524*		**6400** *14112*	**7000** *15435*	**7600** *16758*	**8000** *17640*	**8720** *19228*	**9200** *20286*			
Machine - Use (**kg** - *lbs*)	**UNDERGROUND TRANSPORT MACHINE**											
ALL AXLES	**5600** *12348*	**6300** *13892*		**7100** *15656*	**7750** *17089*	**8250** *18191*	**9000** *19845*	**9500** *20948*	**10000** *22050*			

COMMERCIAL DESCRIPTION	CAI *MSPN*	Max. dist./ hour **km** *mile*	TKPH [1] *TMPH*	e **mm** *inch*	D **mm** *inch*	R' **mm** *inch*	RC **mm** *inch*	Tread depth **mm** *32rd*	Dual Spacing **mm** *inch*	Cap. **liter** *gallon*	Measuring [2] [3] Recommended Rim	Other Approved [2] [3] Rims
XMINE D2 PRO L5 * 20.5 R 25 Tubeless**	**539641** *21899*	**6** *3.7*		**562** *22.1*	**1532** *60.3*	**692** *27.2*	**4627** *182.2*	**74** *93.2*		**447** *118.1*	**17.00/1.7**	17.00/2.0
Bar *Psi*	**3** *44*	**3.5** *51*		**4** *58*	**4.5** *65*	**5** *73*	**5.5** *80*	**6** *87*	**6.5** *94*	**7** *102*		
Machine - Use (**kg** - *lbs*)	**LOADERS**											
FRONT LADEN	**6300** *13892*	**7100** *15656*		**8000** *17640*	**8750** *19294*	**9500** *20948*	**10000** *22050*	**10900** *24035*	**11500** *25358*	**13200** *29106*		
REAR UNLADEN	**5040** *11113*	**5680** *12524*		**6400** *14112*	**7000** *15435*	**7600** *16758*	**8000** *17640*	**8720** *19228*	**9200** *20286*	**10560** *23285*		
Machine - Use (**kg** - *lbs*)	**UNDERGROUND TRANSPORT MACHINE**											
ALL AXLES	**5600** *12348*	**6300** *13892*		**7100** *15656*	**7750** *17089*	**8250** *18191*	**9000** *19845*	**9500** *20948*	**10000** *22050*	**11800** *26019*		

COMMERCIAL DESCRIPTION	CAI *MSPN*	Max. dist./ hour **km** *mile*	TKPH [1] *TMPH*	e **mm** *inch*	D **mm** *inch*	R' **mm** *inch*	RC **mm** *inch*	Tread depth **mm** *32rd*	Dual Spacing **mm** *inch*	Cap. **liter** *gallon*	Measuring [2] [3] Recommended Rim	Other Approved [2] [3] Rims
X-CRANE + 176F 525/80 R 25 Tubeless	**086926** *33880*	**80** *49.7*		**528** *20.8*	**1482** *58.3*	**682** *26.9*	**4508** *177.5*	**28** *35.3*		**500** *132.1*	**17.00/1.7 CR**	17.00/2.0
Bar *Psi*	**5** *73*	**6** *87*	**7** *102*									
Machine - Use (**kg** - *lbs*)	**CRANES AND SIMILAR SPECIALIZED MACHINES**											
30 KM/H *19 MPH*	**6700** *14774*	**7700** *16979*	**8900** *19625*									
40 KM/H *25 MPH*	**6150** *13561*	**7100** *15656*	**8200** *18081*									
50 KM/H *31 MPH*	**6000** *13230*	**6900** *15215*	**8000** *17640*									
60 KM/H *37 MPH*	**5900** *13010*	**6800** *14994*	**7850** *17309*									
65 KM/H *40 MPH*	**5750** *12679*	**6650** *14663*	**7650** *16868*									
70 KM/H *43 MPH*	**5650** *12458*	**6500** *14333*	**7500** *16538*									
80 KM/H *50 MPH*	**5350** *11797*	**6150** *13561*	**7100** *15656*									
90 KM/H *56 MPH*	**5050** *11135*	**5800** *12789*	**6700** *14774*									
100 KM/H *62 MPH*	**4550** *10033*	**5250** *11576*	**6050** *13340*									

TIRE LOAD IN KG/LB – TIRE PRESSURE IN BAR/PSI

COMMERCIAL DESCRIPTION	CAI *MSPN*	Max. dist./ hour **km** *mile*	**TKPH** [1] *TMPH*	e **mm** *inch*	D **mm** *inch*	R' **mm** *inch*	RC **mm** *inch*	Tread depth **mm** *32rd*	Dual Spacing **mm** *inch*	Cap. **liter** *gallon*	Measuring [2] [3] Recommended Rim	Other Approved [2] [3] Rims
XS E7 21.00 R 25 Tubeless [9]	276670			558 *22*	1750 *68.9*	767 *30.2*	5226 *205.7*	19 *23.9*		700 *184.9*	15.00/3.0	

Bar *Psi*	1 *15*	1.5 *22*	2 *29*	2.5 *36*	3 *44*	3.5 *51*	4 *58*	4.5 *65*	5 *73*	6 *87*
Machine - Use (**kg** - *lbs*)	**DESERT CONDITIONS 65 KM/H MAX.**									
ROAD IN SINGLE	2500 *5513*	3050 *6725*	3750 *8269*	4500 *9923*	5250 *11576*	6000 *13230*	6650 *14663*	7350 *16207*	8050 *17750*	9500 *20948*
ROAD IN TWIN	2250 *4961*	2745 *6053*	3375 *7442*	4050 *8930*	4725 *10419*	5400 *11907*	6435 *14189*	6615 *14586*	7245 *15975*	8550 *18853*
TRACK IN SINGLE	2750 *6064*	3750 *8269*	4750 *10474*	5800 *12789*	6800 *14994*	7800 *17199*				
TRACK IN TWIN	2475 *5457*	3375 *7442*	4275 *9426*	5220 *11510*	6120 *13495*	7020 *15479*				
SAND IN SINGLE	4250 *9371*	6000 *13230*	7600 *16758*							
SAND IN TWIN	3825 *8434*	5400 *11907*	6840 *15082*							

COMMERCIAL DESCRIPTION	CAI *MSPN*	Max. dist./ hour **km** *mile*	**TKPH** [1] *TMPH*	e **mm** *inch*	D **mm** *inch*	R' **mm** *inch*	RC **mm** *inch*	Tread depth **mm** *32rd*	Dual Spacing **mm** *inch*	Cap. **liter** *gallon*	Measuring [2] [3] Recommended Rim	Other Approved [2] [3] Rims
XLD 65 L3T * 550/65 R 25 Tubeless	123570 *86785*	16 *9.9*		549 *21.6*	1400 *55.1*	600 *23.6*	4147 *163.3*	32 *40.3*		450 *118.9*	17.00/1.7	17.00/2.0

Bar *Psi*	2 *29*	2.25 *33*	2.5 *36*	3 *44*	3.25 *47*	3.5 *51*	4 *58*	4.25 *62*	4.5 *65*	5 *73*
Machine - Use (**kg** - *lbs*)	**LOADERS**									
FRONT LADEN	4900 *10805*	5350 *11797*	5800 *12789*	6700 *14774*	7150 *15766*	7600 *16758*	8500 *18743*	8950 *19735*	9400 *20727*	10300 *22712*
REAR UNLADEN	3925 *8655*	4290 *9459*	4650 *10253*	5350 *11797*	5720 *12613*	6075 *13395*	6800 *14994*	7165 *15799*	7525 *16593*	8250 *18191*
Machine - Use (**kg** - *lbs*)	**GRADERS**									
ALL AXLES	2940 *6483*	3210 *7078*	3480 *7673*	4020 *8864*	4290 *9459*	4560 *10055*	5100 *11246*			

COMMERCIAL DESCRIPTION	CAI *MSPN*	Max. dist./ hour **km** *mile*	**TKPH** [1] *TMPH*	e **mm** *inch*	D **mm** *inch*	R' **mm** *inch*	RC **mm** *inch*	Tread depth **mm** *32rd*	Dual Spacing **mm** *inch*	Cap. **liter** *gallon*	Measuring [2] [3] Recommended Rim	Other Approved [2] [3] Rims
XADN+ E3 ** 185B 23.5 R 25 Tubeless	295773 *31373*	28 *17.4*	207 *142*	602 *23.7*	1598 *62.9*	721 *28.4*	4824 *189.9*	38 *47.9*		702 *185.5*	19.50/2.5	

Bar *Psi*	2 *29*	2.5 *36*	3 *44*	3.5 *51*	3.75 *54*	4 *58*	4.5 *65*	5 *73*
Machine - Use (**kg** - *lbs*)	**ARTICULATED DUMP TRUCKS**							
STANDARD	4930 *10871*	5650 *12458*	6380 *14068*	7100 *15656*	7450 *16427*	7800 *17199*	8550 *18853*	9250 *20396*

COMMERCIAL DESCRIPTION	CAI *MSPN*	Max. dist./ hour **km** *mile*	**TKPH** [1] *TMPH*	e **mm** *inch*	D **mm** *inch*	R' **mm** *inch*	RC **mm** *inch*	Tread depth **mm** *32rd*	Dual Spacing **mm** *inch*	Cap. **liter** *gallon*	Measuring [2] [3] Recommended Rim	Other Approved [2] [3] Rims
XADN+ B4 E3 ** 185B 23.5 R 25 Tubeless	676673 *44634*	28 *17.4*	207 *142*	602 *23.7*	1598 *62.9*	721 *28.4*	4824 *189.9*	38 *47.9*		702 *185.5*	19.50/2.5	

Bar *Psi*	2 *29*	2.5 *36*	3 *44*	3.5 *51*	3.75 *54*	4 *58*	4.5 *65*	5 *73*
Machine - Use (**kg** - *lbs*)	**ARTICULATED DUMP TRUCKS**							
STANDARD	4930 *10871*	5650 *12458*	6380 *14068*	7100 *15656*	7450 *16427*	7800 *17199*	8550 *18853*	9250 *20396*

TIRE LOAD IN KG/LB – TIRE PRESSURE IN BAR/PSI

COMMERCIAL DESCRIPTION	CAI *MSPN*	Max. dist./ hour **km** *mile*	**TKPH** [1] *TMPH*	e **mm** *inch*	D **mm** *inch*	R' **mm** *inch*	RC **mm** *inch*	Tread depth **mm** *32rd*	Dual Spacing **mm** *inch*	Cap. **liter** *gallon*	Measuring [2] [3] Recommended Rim	Other Approved [2] [3] Rims
XTRA DEFEND E4 ** 185B 23.5 R 25 Tubeless	**923499** *63502*	**26** *16.2*	**192** *132*	**615** *24.2*	**1628** *64.1*	**731** *28.8*	**4906** *193.1*	**54** *68*		**658** *173.8*	**19.50/2.5**	
Bar *Psi*	**2** *29*	**2.5** *36*	**3** *44*	**3.5** *51*	**3.75** *54*	**4** *58*	**4.5** *65*	**5** *73*	**5.5** *80*			
Machine - Use (**kg** - *lbs*)	**ARTICULATED DUMP TRUCKS**											
STANDARD	**5650** *12458*	**6380** *14068*	**7100** *15656*	**7800** *17199*	**8175** *18026*	**8550** *18853*	**9250** *20396*	**9950** *21940*	**10350** *22822*			

COMMERCIAL DESCRIPTION	CAI *MSPN*	Max. dist./ hour **km** *mile*	**TKPH** [1] *TMPH*	e **mm** *inch*	D **mm** *inch*	R' **mm** *inch*	RC **mm** *inch*	Tread depth **mm** *32rd*	Dual Spacing **mm** *inch*	Cap. **liter** *gallon*	Measuring [2] [3] Recommended Rim	Other Approved [2] [3] Rims
XSNOPLUS L2T * 23.5 R 25 Tubeless	**460452** *74539*	**16** *9.9*		**603** *23.7*	**1610** *63.4*	**687** *27*	**4761** *187.4*	**34** *42.8*		**670** *177*	**19.50/2.5**	
Bar *Psi*	**2** *29*	**2.5** *36*	**3** *44*	**3.5** *51*	**4** *58*							
Machine - Use (**kg** - *lbs*)	**LOADERS**											
FRONT LADEN	**8100** *17861*	**9100** *20066*	**10150** *22381*	**11150** *24586*	**12150** *26791*							
REAR UNLADEN	**6500** *14333*	**7300** *16097*	**8100** *17861*	**8900** *19625*	**9700** *21389*							
Machine - Use (**kg** - *lbs*)	**GRADERS**											
ALL AXLES	**4875** *10749*	**5425** *11962*	**6000** *13230*									

COMMERCIAL DESCRIPTION	CAI *MSPN*	Max. dist./ hour **km** *mile*	**TKPH** [1] *TMPH*	e **mm** *inch*	D **mm** *inch*	R' **mm** *inch*	RC **mm** *inch*	Tread depth **mm** *32rd*	Dual Spacing **mm** *inch*	Cap. **liter** *gallon*	Measuring [2] [3] Recommended Rim	Other Approved [2] [3] Rims
XTL A L2 * 23.5 R 25 Tubeless [5]	**123445** *49977*	**16** *9.9*		**596** *23.5*	**1614** *63.5*	**686** *27*	**4766** *187.6*	**34** *42.8*		**680** *179.7*	**19.50/2.5**	
Bar *Psi*	**2** *29*	**2.5** *36*	**3** *44*	**3.5** *51*	**4** *58*							
Machine - Use (**kg** - *lbs*)	**LOADERS**											
FRONT LADEN	**8100** *17861*	**9100** *20066*	**10150** *22381*	**11150** *24586*	**12150** *26791*							
REAR UNLADEN	**6500** *14333*	**7300** *16097*	**8100** *17861*	**8900** *19625*	**9700** *21389*							
Machine - Use (**kg** - *lbs*)	**GRADERS**											
ALL AXLES	**4875** *10749*	**5425** *11962*	**6000** *13230*									

COMMERCIAL DESCRIPTION	CAI *MSPN*	Max. dist./ hour **km** *mile*	**TKPH** [1] *TMPH*	e **mm** *inch*	D **mm** *inch*	R' **mm** *inch*	RC **mm** *inch*	Tread depth **mm** *32rd*	Dual Spacing **mm** *inch*	Cap. **liter** *gallon*	Measuring [2] [3] Recommended Rim	Other Approved [2] [3] Rims
XHA2 L3 * 195A2 23.5 R 25 Tubeless	**139147** *65791*	**16** *9.9*		**599** *23.6*	**1612** *63.5*	**690** *27.2*	**4773** *187.9*	**36** *45.4*		**672** *177.5*	**19.50/2.5**	
Bar *Psi*	**2** *29*	**2.5** *36*	**3** *44*	**3.5** *51*	**4** *58*							
Machine - Use (**kg** - *lbs*)	**LOADERS**											
FRONT LADEN	**8100** *17861*	**9100** *20066*	**10150** *22381*	**11150** *24586*	**12150** *26791*							
REAR UNLADEN	**6500** *14333*	**7300** *16097*	**8100** *17861*	**8900** *19625*	**9700** *21389*							
Machine - Use (**kg** - *lbs*)	**GRADERS**											
ALL AXLES	**4875** *10749*	**5425** *11962*	**6000** *13230*									

TIRE LOAD IN KG/LB – TIRE PRESSURE IN BAR/PSI

COMMERCIAL DESCRIPTION	CAI *MSPN*	Max. dist./ hour **km** *mile*	TKPH [1] *TMPH*	e **mm** *inch*	D **mm** *inch*	R' **mm** *inch*	RC **mm** *inch*	Tread depth **mm** *32rd*	Dual Spacing **mm** *inch*	Cap. **liter** *gallon*	Measuring [2] [3] Recommended Rim	Other Approved [2] [3] Rims
XK A L3 ** 23.5 R 25 Tubeless [12]	263670 *05173*	14 *8.7*		632 *24.9*	1611 *63.4*	702 *27.6*	4802 *189.1*	30 *37.8*		635 *167.8*	19.50/2.5	
Bar *Psi*	2 *29*	2.5 *36*		3 *44*	3.5 *51*	4 *58*	4.5 *65*	5 *73*	5.5 *80*			
Machine - Use (**kg** - *lbs*)	**LOADERS**											
FRONT LADEN	8100 *17861*	9100 *20066*		10150 *22381*	11150 *24586*	12150 *26791*	13350 *29437*	13900 *30650*	14500 *31973*			
REAR UNLADEN	6500 *14333*	7300 *16097*		8100 *17861*	8900 *19625*	9700 *21389*	10700 *23594*	11160 *24608*	11600 *25578*			
Machine - Use (**kg** - *lbs*)	**UNDERGROUND TRANSPORT MACHINE**											
ALL AXLES				7300 *16097*	8250 *18191*	9000 *19845*	9750 *21499*	10600 *23373*	11500 *25358*			

COMMERCIAL DESCRIPTION	CAI *MSPN*	Max. dist./ hour **km** *mile*	TKPH [1] *TMPH*	e **mm** *inch*	D **mm** *inch*	R' **mm** *inch*	RC **mm** *inch*	Tread depth **mm** *32rd*	Dual Spacing **mm** *inch*	Cap. **liter** *gallon*	Measuring [2] [3] Recommended Rim	Other Approved [2] [3] Rims
XLD D2 A L5T * 23.5 R 25 Tubeless	123326 *58159*	10 *6.2*		612 *24.1*	1662 *65.4*	722 *28.4*	4947 *194.8*	77 *97*		600 *158.5*	19.50/2.5	
Bar *Psi*	2 *29*	2.5 *36*		3 *44*	3.5 *51*	4 *58*	4.5 *65*	5 *73*	5.5 *80*			
Machine - Use (**kg** - *lbs*)	**LOADERS**											
FRONT LADEN	8100 *17861*	9100 *20066*		10150 *22381*	11150 *24586*	12150 *26791*						
REAR UNLADEN	6500 *14333*	7300 *16097*		8100 *17861*	8900 *19625*	9700 *21389*						
Machine - Use (**kg** - *lbs*)	**GRADERS**											
ALL AXLES	4875 *10749*	5425 *11962*		6000 *13230*								
Machine - Use (**kg** - *lbs*)	**UNDERGROUND TRANSPORT MACHINE**											
ALL AXLES				7300 *16097*	8250 *18191*	9000 *19845*	9750 *21499*	10600 *23373*	11500 *25358*			

COMMERCIAL DESCRIPTION	CAI *MSPN*	Max. dist./ hour **km** *mile*	TKPH [1] *TMPH*	e **mm** *inch*	D **mm** *inch*	R' **mm** *inch*	RC **mm** *inch*	Tread depth **mm** *32rd*	Dual Spacing **mm** *inch*	Cap. **liter** *gallon*	Measuring [2] [3] Recommended Rim	Other Approved [2] [3] Rims
XMINE D2 L5 ** 23.5 R 25 Tubeless	199408 *32199*	6 *3.7*		637 *25.1*	1656 *65.2*	751 *29.6*	5009 *197.2*	83 *104.6*		590 *155.9*	19.50/2.5	
Bar *Psi*	3 *44*	3.5 *51*		4 *58*	4.5 *65*	5 *73*	5.5 *80*	6 *87*	6.5 *94*			
Machine - Use (**kg** - *lbs*)	**LOADERS**											
FRONT LADEN	8250 *18191*	9250 *20396*		10300 *22712*	11200 *24696*	12150 *26791*	12850 *28334*	13600 *29988*	14500 *31973*			
REAR UNLADEN	6600 *14553*	7400 *16317*		8240 *18169*	8960 *19757*	9720 *21433*	10280 *22667*	10880 *23990*	11600 *25578*			
Machine - Use (**kg** - *lbs*)	**UNDERGROUND TRANSPORT MACHINE**											
ALL AXLES	7300 *16097*	8250 *18191*		9000 *19845*	9750 *21499*	10600 *23373*	11500 *25358*	12150 *26791*	12850 *28334*			

TIRE LOAD IN KG/LB – TIRE PRESSURE IN BAR/PSI

COMMERCIAL DESCRIPTION	CAI *MSPN*	Max. dist./ hour **km** *mile*	**TKPH** [1] *TMPH*	e **mm** *inch*	D **mm** *inch*	R' **mm** *inch*	RC **mm** *inch*	Tread depth **mm** *32rd*	Dual Spacing **mm** *inch*	Cap. **liter** *gallon*	Measuring [2] [3] Recommended Rim	Other Approved [2] [3] Rims
XMINE D2 PRO L5 * 23.5 R 25 Tubeless**	**813419** *10697*	**6** *3.7*		**643** *25.3*	**1660** *65.4*	**746** *29.4*	**5004** *197*	**83** *104.6*		**590** *155.9*	**19.50/2.5**	
Bar *Psi*	**3** *44*	**3.5** *51*	**4** *58*	**4.5** *65*	**5** *73*	**5.5** *80*	**6** *87*	**6.5** *94*	**7** *102*			
Machine - Use (**kg** - *lbs*)	**LOADERS**											
FRONT LADEN	**8250** *18191*	**9250** *20396*	**10300** *22712*	**11200** *24696*	**12150** *26791*	**12850** *28334*	**13600** *29988*	**14400** *31752*	**17000** *37485*			
REAR UNLADEN	**6600** *14553*	**7400** *16317*	**8240** *18169*	**8960** *19757*	**9720** *21433*	**10280** *22667*	**10880** *23990*	**11600** *25578*	**13600** *29988*			
Machine - Use (**kg** - *lbs*)	**UNDERGROUND TRANSPORT MACHINE**											
ALL AXLES	**7300** *16097*	**8250** *18191*	**9000** *19845*	**9750** *21499*	**10600** *23373*	**11500** *25358*	**12150** *26791*	**12850** *28334*	**15000** *33075*			

COMMERCIAL DESCRIPTION	CAI *MSPN*	Max. dist./ hour **km** *mile*	**TKPH** [1] *TMPH*	e **mm** *inch*	D **mm** *inch*	R' **mm** *inch*	RC **mm** *inch*	Tread depth **mm** *32rd*	Dual Spacing **mm** *inch*	Cap. **liter** *gallon*	Measuring [2] [3] Recommended Rim	Other Approved [2] [3] Rims
XMINE D2 L5R * 23.5 R 25 Tubeless [8]	**266931** *14357*	**6** *3.7*		**637** *25.1*	**1656** *65.2*	**707** *27.8*	**4898** *192.8*	**83** *104.6*		**590** *155.9*	**19.50/2.5**	
Bar *Psi*	**2** *29*	**2.5** *36*	**3** *44*	**3.5** *51*	**4** *58*	**4.5** *65*	**5** *73*	**5.5** *80*				
Machine - Use (**kg** - *lbs*)	**LOADERS**											
FRONT LADEN	**8100** *17861*	**9100** *20066*	**10150** *22381*	**11150** *24586*	**12150** *26791*							
REAR UNLADEN	**6500** *14333*	**7300** *16097*	**8100** *17861*	**8900** *19625*	**9700** *21389*							
Machine - Use (**kg** - *lbs*)	**UNDERGROUND TRANSPORT MACHINE**											
ALL AXLES			**7300** *16097*	**8250** *18191*	**9000** *19845*	**9750** *21499*	**10600** *23373*	**11500** *25358*				

COMMERCIAL DESCRIPTION	CAI *MSPN*	Max. dist./ hour **km** *mile*	**TKPH** [1] *TMPH*	e **mm** *inch*	D **mm** *inch*	R' **mm** *inch*	RC **mm** *inch*	Tread depth **mm** *32rd*	Dual Spacing **mm** *inch*	Cap. **liter** *gallon*	Measuring [2] [3] Recommended Rim	Other Approved [2] [3] Rims
XLD 65 L3T * 600/65 R 25 Tubeless	**063799** *82704*	**16** *9.9*		**622** *24.5*	**1429** *56.3*	**617** *24.3*	**4246** *167.2*	**34** *42.8*		**484** *127.9*	**19.50/2.5**	17.00/1.7 17.00/2.0
Bar *Psi*	**2** *29*	**2.5** *36*	**3** *44*	**3.5** *51*	**4** *58*	**4.5** *65*	**5** *73*					
Machine - Use (**kg** - *lbs*)	**LOADERS**											
FRONT LADEN	**5650** *12458*	**6675** *14718*	**7700** *16979*	**8725** *19239*	**9750** *21499*	**10725** *23649*	**11700** *25799*					
REAR UNLADEN	**4520** *9967*	**5340** *11775*	**6160** *13583*	**6980** *15391*	**7800** *17199*	**8580** *18919*	**9360** *20639*					
Machine - Use (**kg** - *lbs*)	**GRADERS**											
ALL AXLES	**3390** *7475*	**4005** *8831*	**4600** *10143*									

COMMERCIAL DESCRIPTION	CAI *MSPN*	Max. dist./ hour **km** *mile*	**TKPH** [1] *TMPH*	e **mm** *inch*	D **mm** *inch*	R' **mm** *inch*	RC **mm** *inch*	Tread depth **mm** *32rd*	Dual Spacing **mm** *inch*	Cap. **liter** *gallon*	Measuring [2] [3] Recommended Rim	Other Approved [2] [3] Rims
XAD 65-1 SUPER E3T ** 180B 650/65 R 25 Tubeless	**840573** *89647*	**28** *17.4*	**179** *123*	**630** *24.8*	**1494** *58.8*	**669** *26.3*	**4498** *177.1*	**40** *50.4*		**595** *157.2*	**19.50/2.5**	22.00/3.0
Bar *Psi*	**2.5** *36*	**3** *44*	**3.5** *51*	**4** *58*								
Machine - Use (**kg** - *lbs*)	**ARTICULATED DUMP TRUCKS**											
STANDARD	**5450** *12017*	**6300** *13892*	**7150** *15766*	**8000** *17640*								

TIRE LOAD IN KG/LB – TIRE PRESSURE IN BAR/PSI

COMMERCIAL DESCRIPTION	CAI *MSPN*	Max. dist./ hour **km** *mile*	TKPH [1] *TMPH*	e **mm** *inch*	D **mm** *inch*	R' **mm** *inch*	RC **mm** *inch*	Tread depth **mm** *32rd*	Dual Spacing **mm** *inch*	Cap. **liter** *gallon*	Measuring [2] [3] Recommended Rim	Other Approved [2] [3] Rims
XLD 65 L3T * 650/65 R 25 Tubeless	**123820** *90278*	**16** *9.9*		**634** *25*	**1498** *59*	**637** *25.1*	**4425** *174.2*	**37** *46.6*		**596** *157.5*	**19.50/2.5**	

Bar *Psi*	**2** *29*	**2.5** *36*	**3** *44*	**3.5** *51*	**4** *58*	**4.5** *65*	**5** *73*
Machine - Use (**kg** - *lbs*)	**LOADERS**						
FRONT LADEN	**6700** *14774*	**7900** *17420*	**9100** *20066*	**10300** *22712*	**11500** *25358*	**12700** *28004*	**13900** *30650*
REAR UNLADEN	**5400** *11907*	**6350** *14002*	**7300** *16097*	**8250** *18191*	**9200** *20286*	**10150** *22381*	**11100** *24476*
Machine - Use (**kg** - *lbs*)	**GRADERS**						
ALL AXLES	**4100** *9041*	**4800** *10584*	**5500** *12128*	**6200** *13671*	**6900** *15215*	**7600** *16758*	**8300** *18302*

COMMERCIAL DESCRIPTION	CAI *MSPN*	Max. dist./ hour **km** *mile*	TKPH [1] *TMPH*	e **mm** *inch*	D **mm** *inch*	R' **mm** *inch*	RC **mm** *inch*	Tread depth **mm** *32rd*	Dual Spacing **mm** *inch*	Cap. **liter** *gallon*	Measuring [2] [3] Recommended Rim	Other Approved [2] [3] Rims
XADN+ B4 E3 ** 193B 26.5 R 25 Tubeless	**238546** *44737*	**28** *17.4*	**258** *177*	**687** *27*	**1726** *68*	**773** *30.4*	**5196** *204.6*	**41** *51.7*		**908** *239.9*	**22.00/3.0**	22.00/3.0 IF

Bar *Psi*	**2** *29*	**2.5** *36*	**3** *44*	**3.25** *47*	**3.5** *51*	**4** *58*	**4.5** *65*	**5** *73*
Machine - Use (**kg** - *lbs*)	**ARTICULATED DUMP TRUCKS**							
STANDARD		**6500** *14333*	**7500** *16538*	**8000** *17640*	**8500** *18743*	**9500** *20948*	**10500** *23153*	**11500** *25358*

COMMERCIAL DESCRIPTION	CAI *MSPN*	Max. dist./ hour **km** *mile*	TKPH [1] *TMPH*	e **mm** *inch*	D **mm** *inch*	R' **mm** *inch*	RC **mm** *inch*	Tread depth **mm** *32rd*	Dual Spacing **mm** *inch*	Cap. **liter** *gallon*	Measuring [2] [3] Recommended Rim	Other Approved [2] [3] Rims
XADN+ E3 ** 193B 26.5 R 25 Tubeless	**154324** *72625*	**28** *17.4*	**258** *177*	**687** *27*	**1726** *68*	**773** *30.4*	**5196** *204.6*	**41** *51.7*		**908** *239.9*	**22.00/3.0**	22.00/3.0 IF

Bar *Psi*	**2** *29*	**2.5** *36*	**3** *44*	**3.25** *47*	**3.5** *51*	**4** *58*	**4.5** *65*	**5** *73*
Machine - Use (**kg** - *lbs*)	**ARTICULATED DUMP TRUCKS**							
STANDARD		**6500** *14333*	**7500** *16538*	**8000** *17640*	**8500** *18743*	**9500** *20948*	**10500** *23153*	**11500** *25358*

COMMERCIAL DESCRIPTION	CAI *MSPN*	Max. dist./ hour **km** *mile*	TKPH [1] *TMPH*	e **mm** *inch*	D **mm** *inch*	R' **mm** *inch*	RC **mm** *inch*	Tread depth **mm** *32rd*	Dual Spacing **mm** *inch*	Cap. **liter** *gallon*	Measuring [2] [3] Recommended Rim	Other Approved [2] [3] Rims
XADN E3T ** 193B 26.5 R 25 Tubeless [8]	**123427** *72625*	**28** *17.4*		**675** *26.6*	**1728** *68*	**769** *30.3*	**5190** *204.3*	**41** *51.7*		**900** *237.8*	**22.00/3.0**	22.00/3.0 IF

Bar *Psi*	**2** *29*	**2.5** *36*	**3** *44*	**3.25** *47*	**3.5** *51*	**4** *58*	**4.5** *65*
Machine - Use (**kg** - *lbs*)	**ARTICULATED DUMP TRUCKS**						
STANDARD	**6500** *14333*	**7500** *16538*	**8500** *18743*	**9000** *19845*	**9500** *20948*	**10500** *23153*	**11500** *25358*

COMMERCIAL DESCRIPTION	CAI *MSPN*	Max. dist./ hour **km** *mile*	TKPH [1] *TMPH*	e **mm** *inch*	D **mm** *inch*	R' **mm** *inch*	RC **mm** *inch*	Tread depth **mm** *32rd*	Dual Spacing **mm** *inch*	Cap. **liter** *gallon*	Measuring [2] [3] Recommended Rim	Other Approved [2] [3] Rims
X-SUPER TERRAIN+ E4 ** 193B 26.5 R 25 Tubeless	**039476** *35486*	**24** *14.9*	**221** *151*	**691** *27.2*	**1749** *68.9*	**783** *30.8*	**5266** *207.3*	**54** *68*		**862** *227.7*	**22.00/3.0**	22.00/3.0 IF

Bar *Psi*	**2** *29*	**2.5** *36*	**3** *44*	**3.25** *47*	**3.5** *51*	**4** *58*	**4.5** *65*	**5** *73*
Machine - Use (**kg** - *lbs*)	**ARTICULATED DUMP TRUCKS**							
STANDARD		**6500** *14333*	**7500** *16538*	**8000** *17640*	**8500** *18743*	**9500** *20948*	**10500** *23153*	**11500** *25358*

TIRE LOAD IN KG/LB – TIRE PRESSURE IN BAR/PSI

COMMERCIAL DESCRIPTION	CAI *MSPN*	Max. dist./ hour **km** *mile*	TKPH [1] *TMPH*	e **mm** *inch*	D **mm** *inch*	R' **mm** *inch*	RC **mm** *inch*	Tread depth **mm** *32rd*	Dual Spacing **mm** *inch*	Cap. **liter** *gallon*	Measuring [2] [3] Recommended Rim	Other Approved [2] [3] Rims
XHA2 L3 ** 209A2 26.5 R 25 Tubeless	**893825** *65348*	**16** *9.9*		**678** *26.7*	**1732** *68.2*	**740** *29.1*	**5125** *201.8*	**41** *51.7*		**879** *232.2*	**22.00/3.0**	22.00/3.0 IF

Bar *Psi*	**2** *29*	**2.5** *36*	**3** *44*	**3.5** *51*	**4** *58*	**4.5** *65*	**5** *73*	**5.5** *80*
Machine - Use (**kg** - *lbs*)	**LOADERS**							
FRONT LADEN	**9300** *20507*	**10300** *22712*	**12150** *26791*	**13600** *29988*	**15000** *33075*	**16150** *35611*	**17350** *38257*	**18500** *40793*
REAR UNLADEN	**7450** *16427*	**8250** *18191*	**9700** *21389*	**10900** *24035*	**12000** *26460*	**12900** *28445*	**13900** *30650*	**14800** *32634*
Machine - Use (**kg** - *lbs*)	**GRADERS**							
ALL AXLES	**5400** *11907*	**6400** *14112*	**7500** *16538*					

COMMERCIAL DESCRIPTION	CAI *MSPN*	Max. dist./ hour **km** *mile*	TKPH [1] *TMPH*	e **mm** *inch*	D **mm** *inch*	R' **mm** *inch*	RC **mm** *inch*	Tread depth **mm** *32rd*	Dual Spacing **mm** *inch*	Cap. **liter** *gallon*	Measuring [2] [3] Recommended Rim	Other Approved [2] [3] Rims
XK A L3 ** 26.5 R 25 Tubeless (8 - 12)	**273360** *45856*	**14** *8.7*		**714** *28.1*	**1734** *68.3*	**763** *30*	**5186** *204.2*	**35** *44.1*		**855** *225.9*	**22.00/3.0**	22.00/3.0 IF

Bar *Psi*	**3** *44*	**4** *58*	**4.5** *65*	**5** *73*	**5.5** *80*	**6** *87*	**6.5** *94*
Machine - Use (**kg** - *lbs*)	**LOADERS**						
FRONT LADEN	**10300** *22712*	**12850** *28334*	**14000** *30870*	**15000** *33075*	**16000** *35280*	**17000** *37485*	**18500** *40793*
REAR UNLADEN	**8240** *18169*	**10280** *22667*	**11200** *24696*	**12000** *26460*	**12800** *28224*	**13600** *29988*	**14800** *32634*
Machine - Use (**kg** - *lbs*)	**UNDERGROUND TRANSPORT MACHINE**						
ALL AXLES	**9000** *19845*	**11200** *24696*	**12500** *27563*	**13200** *29106*	**14500** *31973*	**15500** *34178*	**16500** *36383*

COMMERCIAL DESCRIPTION	CAI *MSPN*	Max. dist./ hour **km** *mile*	TKPH [1] *TMPH*	e **mm** *inch*	D **mm** *inch*	R' **mm** *inch*	RC **mm** *inch*	Tread depth **mm** *32rd*	Dual Spacing **mm** *inch*	Cap. **liter** *gallon*	Measuring [2] [3] Recommended Rim	Other Approved [2] [3] Rims
XSM DN L3S 26.5 R 25 Tubeless [9]	**123022**	**10** *6.2*		**724** *28.5*	**1726** *68*	**770** *30.3*	**5189** *204.3*	**48** *60.5*		**890** *235.1*	**22.00/3.0**	22.00/3.0 IF

Bar *Psi*	**2** *29*	**2.5** *36*	**3** *44*	**3.5** *51*	**4** *58*	**4.5** *65*	**5** *73*	**5.5** *80*
Machine - Use (**kg** - *lbs*)	**LOADERS**							
FRONT LADEN	**9300** *20507*	**10300** *22712*	**12150** *26791*	**13600** *29988*	**15000** *33075*	**16150** *35611*	**17350** *38257*	**18500** *40793*
REAR UNLADEN	**7450** *16427*	**8250** *18191*	**9700** *21389*	**10900** *24035*	**12000** *26460*	**12900** *28445*	**13900** *30650*	**14800** *32634*
Machine - Use (**kg** - *lbs*)	**UNDERGROUND TRANSPORT MACHINE**							
ALL AXLES			**9000** *19845*	**10300** *22712*	**11200** *24696*	**12500** *27563*	**13200** *29106*	**14500** *31973*

COMMERCIAL DESCRIPTION	CAI *MSPN*	Max. dist./ hour **km** *mile*	TKPH [1] *TMPH*	e **mm** *inch*	D **mm** *inch*	R' **mm** *inch*	RC **mm** *inch*	Tread depth **mm** *32rd*	Dual Spacing **mm** *inch*	Cap. **liter** *gallon*	Measuring [2] [3] Recommended Rim	Other Approved [2] [3] Rims
XSM DN+ L3S * 26.5 R 25 Tubeless**	**569259** *29138*	**10** *6.2*		**704** *27.7*	**1727** *68*	**770** *30.3*	**5192** *204.4*	**44** *55.4*		**836** *220.9*	**22.00/3.0**	22.00/3.0 IF

Bar *Psi*	**3** *44*	**4** *58*	**4.5** *65*	**5** *73*	**5.5** *80*	**6** *87*	**6.5** *94*	**7** *102*	**7.5** *109*	**8** *116*
Machine - Use (**kg** - *lbs*)	**LOADERS**									
FRONT LADEN	**10300** *22712*	**12850** *28334*	**14000** *30870*	**15000** *33075*	**16000** *35280*	**17000** *37485*	**18500** *40793*	**19500** *42998*	**20600** *45423*	**21200** *46746*
REAR UNLADEN	**9100** *20066*	**10600** *23373*	**11450** *25247*	**12300** *27122*	**13100** *28886*	**13800** *30429*	**14650** *32303*	**15400** *33957*	**16200** *35721*	**16850** *37154*

TIRE LOAD IN KG/LB – TIRE PRESSURE IN BAR/PSI

COMMERCIAL DESCRIPTION	CAI *MSPN*	Max. dist./ hour **km** *mile*	TKPH [1] *TMPH*	e **mm** *inch*	D **mm** *inch*	R' **mm** *inch*	RC **mm** *inch*	Tread depth **mm** *32rd*	Dual Spacing **mm** *inch*	Cap. **liter** *gallon*	Measuring [2] [3] Recommended Rim	Other Approved [2] [3] Rims
XTRA DEFEND 193B 26.5 R 25 Tubeless	**740832** *61680*	**24** *14.9*	**221** *151*	**698** *27.5*	**1740** *68.5*	**775** *30.5*	**5228** *205.8*	**59.5** *75*		**870** *229.9*	**22.00/3.0**	22.00/3.0 IF

Bar *Psi*	**2** *29*	**2.5** *36*	**3** *44*	**3.25** *47*	**3.5** *51*	**4** *58*	**4.5** *65*	
Machine - Use (**kg** - *lbs*)	**ARTICULATED DUMP TRUCKS**							
STANDARD	**6500** *14333*	**7500** *16538*	**8500** *18743*	**9000** *19845*	**9500** *20948*	**10500** *23153*	**11500** *25358*	

COMMERCIAL DESCRIPTION	CAI *MSPN*	Max. dist./ hour **km** *mile*	TKPH [1] *TMPH*	e **mm** *inch*	D **mm** *inch*	R' **mm** *inch*	RC **mm** *inch*	Tread depth **mm** *32rd*	Dual Spacing **mm** *inch*	Cap. **liter** *gallon*	Measuring [2] [3] Recommended Rim	Other Approved [2] [3] Rims
XLD D1 A L4R * 26.5 R 25 Tubeless	**123495** *70042*	**14** *8.7*		**690** *27.2*	**1803** *71*	**780** *30.7*	**5360** *211*	**53** *66.8*		**947** *250.2*	**22.00/3.0**	22.00/3.0 IF

Bar *Psi*	**2** *29*	**2.5** *36*	**3** *44*	**3.5** *51*	**4** *58*	**4.5** *65*	**5** *73*	**5.5** *80*
Machine - Use (**kg** - *lbs*)	**LOADERS**							
FRONT LADEN	**9300** *20507*	**10300** *22712*	**12150** *26791*	**13600** *29988*	**15000** *33075*	**16150** *35611*	**17350** *38257*	**18500** *40793*
REAR UNLADEN	**7450** *16427*	**8250** *18191*	**9700** *21389*	**10900** *24035*	**12000** *26460*	**12900** *28445*	**13900** *30650*	**14800** *32634*
Machine - Use (**kg** - *lbs*)	**UNDERGROUND TRANSPORT MACHINE**							
ALL AXLES			**9000** *19845*	**10300** *22712*	**11200** *24696*	**12500** *27563*	**13200** *29106*	**14500** *31973*

COMMERCIAL DESCRIPTION	CAI *MSPN*	Max. dist./ hour **km** *mile*	TKPH [1] *TMPH*	e **mm** *inch*	D **mm** *inch*	R' **mm** *inch*	RC **mm** *inch*	Tread depth **mm** *32rd*	Dual Spacing **mm** *inch*	Cap. **liter** *gallon*	Measuring [2] [3] Recommended Rim	Other Approved [2] [3] Rims
XLD D2 A L5T * 26.5 R 25 Tubeless	**123094** *33046*	**10** *6.2*		**687** *27*	**1800** *70.9*	**778** *30.6*	**5348** *210.6*	**87** *109.6*		**825** *218*	**22.00/3.0**	22.00/3.0 IF

Bar *Psi*	**2** *29*	**2.5** *36*	**3** *44*	**3.5** *51*	**4** *58*	**4.5** *65*	**5** *73*	**5.5** *80*
Machine - Use (**kg** - *lbs*)	**LOADERS**							
FRONT LADEN	**9300** *20507*	**10300** *22712*	**12150** *26791*	**13600** *29988*	**15000** *33075*	**16150** *35611*	**17350** *38257*	**18500** *40793*
REAR UNLADEN	**7450** *16427*	**8250** *18191*	**9700** *21389*	**10900** *24035*	**12000** *26460*	**12900** *28445*	**13900** *30650*	**14800** *32634*
Machine - Use (**kg** - *lbs*)	**UNDERGROUND TRANSPORT MACHINE**							
ALL AXLES			**9000** *19845*	**10300** *22712*	**11200** *24696*	**12500** *27563*	**13200** *29106*	**14500** *31973*

COMMERCIAL DESCRIPTION	CAI *MSPN*	Max. dist./ hour **km** *mile*	TKPH [1] *TMPH*	e **mm** *inch*	D **mm** *inch*	R' **mm** *inch*	RC **mm** *inch*	Tread depth **mm** *32rd*	Dual Spacing **mm** *inch*	Cap. **liter** *gallon*	Measuring [2] [3] Recommended Rim	Other Approved [2] [3] Rims
XMINE D2 L5 ** 26.5 R 25 Tubeless	**164572** *33205*	**6** *3.7*		**718** *28.3*	**1795** *70.7*	**807** *31.8*	**5413** *213.1*	**91** *114.6*		**812** *214.5*	**22.00/3.0**	22.00/3.0 IF

Bar *Psi*	**3** *44*	**4** *58*	**4.5** *65*	**5** *73*	**5.5** *80*	**6** *87*	**6.5** *94*	
Machine - Use (**kg** - *lbs*)	**LOADERS**							
FRONT LADEN	**10300** *22712*	**12850** *28334*	**14000** *30870*	**15000** *33075*	**16000** *35280*	**17000** *37485*	**18500** *40793*	
REAR UNLADEN	**8240** *18169*	**10280** *22667*	**11200** *24696*	**12000** *26460*	**12800** *28224*	**13600** *29988*	**14800** *32634*	
Machine - Use (**kg** - *lbs*)	**UNDERGROUND TRANSPORT MACHINE**							
ALL AXLES	**9000** *19845*	**11200** *24696*	**12500** *27563*	**13200** *29106*	**14500** *31973*	**15500** *34178*	**16500** *36383*	

TIRE LOAD IN KG/LB – TIRE PRESSURE IN BAR/PSI

COMMERCIAL DESCRIPTION	CAI *MSPN*	Max. dist./ hour **km** *mile*	**TKPH** [1] *TMPH*	e **mm** *inch*	D **mm** *inch*	R' **mm** *inch*	RC **mm** *inch*	Tread depth **mm** *32rd*	Dual Spacing **mm** *inch*	Cap. **liter** *gallon*	Measuring [2] [3] Recommended Rim	Other Approved [2] [3] Rims
XMINE D2 L5R * **26.5 R 25 Tubeless** [8]	**273400** *21337*	**6** *3.7*		**718** *28.3*	**1794** *70.6*	**751** *29.6*	**5269** *207.4*	**91** *114.6*		**820** *216.6*	**22.00/3.0**	22.00/3.0 IF

Bar *Psi*	**2** *29*	**2.5** *36*	**3** *44*	**3.5** *51*	**4** *58*	**4.5** *65*	**5** *73*	**5.5** *80*
Machine - Use (**kg** - *lbs*)	**LOADERS**							
FRONT LADEN	**9300** *20507*	**10300** *22712*	**12150** *26791*	**13600** *29988*	**15000** *33075*	**16150** *35611*	**17350** *38257*	**18500** *40793*
REAR UNLADEN	**7450** *16427*	**8250** *18191*	**9700** *21389*	**10900** *24035*	**12000** *26460*	**12900** *28445*	**13900** *30650*	**14800** *32634*
Machine - Use (**kg** - *lbs*)	**UNDERGROUND TRANSPORT MACHINE**							
ALL AXLES			**9000** *19845*	**10300** *22712*	**11200** *24696*	**12500** *27563*	**13200** *29106*	**14500** *31973*

COMMERCIAL DESCRIPTION	CAI *MSPN*	Max. dist./ hour **km** *mile*	**TKPH** [1] *TMPH*	e **mm** *inch*	D **mm** *inch*	R' **mm** *inch*	RC **mm** *inch*	Tread depth **mm** *32rd*	Dual Spacing **mm** *inch*	Cap. **liter** *gallon*	Measuring [2] [3] Recommended Rim	Other Approved [2] [3] Rims
XMINE D2 PRO L5 *** **26.5 R 25 Tubeless** [8]	**858472** *21836*	**6** *3.7*		**724** *28.5*	**1789** *70.4*	**797** *31.4*	**5377** *211.7*	**91** *114.6*		**812** *214.5*	**22.00/3.0**	22.00/3.0 IF

Bar *Psi*	**3** *44*	**4** *58*	**4.5** *65*	**5** *73*	**5.5** *80*	**6** *87*	**6.5** *94*	**7** *102*
Machine - Use (**kg** - *lbs*)	**LOADERS**							
FRONT LADEN	**10300** *22712*	**12850** *28334*	**14000** *30870*	**15000** *33075*	**16000** *35280*	**17000** *37485*	**18500** *40793*	**21200** *46746*
REAR UNLADEN	**8240** *18169*	**10500** *23153*	**11200** *24696*	**12000** *26460*	**12800** *28224*	**13600** *29988*	**14800** *32634*	**16960** *37397*
Machine - Use (**kg** - *lbs*)	**UNDERGROUND TRANSPORT MACHINE**							
ALL AXLES	**9000** *19845*	**11500** *25358*	**12500** *27563*	**13200** *29106*	**14500** *31973*	**15500** *34178*	**16500** *36383*	**19000** *41895*

COMMERCIAL DESCRIPTION	CAI *MSPN*	Max. dist./ hour **km** *mile*	**TKPH** [1] *TMPH*	e **mm** *inch*	D **mm** *inch*	R' **mm** *inch*	RC **mm** *inch*	Tread depth **mm** *32rd*	Dual Spacing **mm** *inch*	Cap. **liter** *gallon*	Measuring [2] [3] Recommended Rim	Other Approved [2] [3] Rims
XSM D2+ L5S ** **26.5 R 25 Tubeless**	**995669** *93041*	**4** *2.5*		**692** *27.2*	**1790** *70.5*	**806** *31.7*	**5400** *212.6*	**102** *128.5*		**771** *203.7*	**22.00/3.0**	22.00/3.0 IF

Bar *Psi*	**3** *44*	**4** *58*	**4.5** *65*	**5** *73*	**5.5** *80*	**6** *87*	**6.5** *94*
Machine - Use (**kg** - *lbs*)	**LOADERS**						
FRONT LADEN	**10300** *22712*	**12850** *28334*	**14000** *30870*	**15000** *33075*	**16000** *35280*	**17000** *37485*	**18500** *40793*
REAR UNLADEN	**8240** *18169*	**10280** *22667*	**11200** *24696*	**12000** *26460*	**12800** *28224*	**13600** *29988*	**14800** *32634*

COMMERCIAL DESCRIPTION	CAI *MSPN*	Max. dist./ hour **km** *mile*	**TKPH** [1] *TMPH*	e **mm** *inch*	D **mm** *inch*	R' **mm** *inch*	RC **mm** *inch*	Tread depth **mm** *32rd*	Dual Spacing **mm** *inch*	Cap. **liter** *gallon*	Measuring [2] [3] Recommended Rim	Other Approved [2] [3] Rims
XSM D2+ PRO L5S *** **26.5 R 25 Tubeless**	**183806** *74661*	**4** *2.5*		**693** *27.3*	**1788** *70.4*	**798** *31.4*	**5376** *211.7*	**102** *128.5*		**771** *203.7*	**22.00/3.0**	22.00/3.0 IF

Bar *Psi*	**3** *44*	**4** *58*	**4.5** *65*	**5** *73*	**5.5** *80*	**6** *87*	**6.5** *94*	**7** *102*
Machine - Use (**kg** - *lbs*)	**LOADER**							
FRONT LADEN	**10300** *22712*	**12850** *28334*	**14000** *30870*	**15000** *33075*	**16000** *35280*	**17000** *37485*	**18500** *40793*	**21200** *46746*
REAR UNLADEN	**8240** *18169*	**10500** *23153*	**11200** *24696*	**12000** *26460*	**12800** *28224*	**13600** *29988*	**14800** *32634*	**16960** *37397*

TIRE LOAD IN KG/LB – TIRE PRESSURE IN BAR/PSI

COMMERCIAL DESCRIPTION	CAI *MSPN*	Max. dist./ hour **km** *mile*	TKPH [1] *TMPH*	e **mm** *inch*	D **mm** *inch*	R' **mm** *inch*	RC **mm** *inch*	Tread depth **mm** *32rd*	Dual Spacing **mm** *inch*	Cap. **liter** *gallon*	Measuring [2] [3] Recommended Rim	Other Approved [2] [3] Rims
XTXL E4 ** L4 *** 214A2 26.5 R 25 Tubeless**	**039149** *06534*	**14** *8.7 if load per tire <=18.5 t* **12** *7.5 if load per tire >18.5 t*	**180** *123*	**687** *27*	**1722** *67.8*	**755** *29.7*	**5143** *202.5*	**54** *68*		**789** *208.5*	**22.00/3.0**	22.00/3.0 IF
Bar *Psi*	**3** *44*	**4** *58*	**4.5** *65*	**5** *73*	**5.5** *80*	**6** *87*	**6.5** *94*	**7** *102*	**7.5** *109*	**8** *116*		
Machine - Use (**kg** - *lbs*)	**LOADER LOAD PER TIRE <= 18.5 T**											
FRONT LADEN	**10300** *22712*	**12850** *28334*	**14000** *30870*	**15000** *33075*	**16000** *35280*	**17000** *37485*	**18500** *40793*					
REAR UNLADEN	**8240** *18169*	**10280** *22667*	**11200** *24696*	**12000** *26460*	**12800** *28224*	**13600** *29988*	**14800** *32634*					
Machine - Use (**kg** - *lbs*)	**LOADER LOAD PER TIRE > 18.5 T**											
FRONT LADEN										**19500** *42998*	**20600** *45423*	**21200** *46746*
REAR UNLADEN										**15600** *34398*	**16480** *36338*	**16960** *37397*
Machine - Use (**kg** - *lbs*)	**UNDERGROUND TRANSPORT MACHINE**											
ALL AXLES	**9000** *19845*	**11200** *24696*	**12500** *27563*	**13200** *29106*	**14500** *31973*	**15500** *34178*	**16500** *36383*	**17000** *37485*	**18000** *39690*	**19000** *41895*		

COMMERCIAL DESCRIPTION	CAI *MSPN*	Max. dist./ hour **km** *mile*	TKPH [1] *TMPH*	e **mm** *inch*	D **mm** *inch*	R' **mm** *inch*	RC **mm** *inch*	Tread depth **mm** *32rd*	Dual Spacing **mm** *inch*	Cap. **liter** *gallon*	Measuring [2] [3] Recommended Rim	Other Approved [2] [3] Rims
XTXL E4 ** 26.5 R 25 Tubeless**	**321951** *81060*		**180** *123*	**687** *27*	**1722** *67.8*	**763** *30*	**5164** *203.3*	**54** *68*		**817** *215.9*	**22.00/3.0**	22.00/3.0 IF
Bar *Psi*	**3** *44*	**4** *58*	**4.5** *65*	**5** *73*	**5.5** *80*	**6** *87*	**6.5** *94*	**7** *102*	**7.5** *109*	**8** *116*		
Machine - Use (**kg** - *lbs*)	**UNDERGROUND TRANSPORT MACHINE**											
ALL AXLES	**9000** *19845*	**11200** *24696*	**12500** *27563*	**13200** *29106*	**14500** *31973*	**15500** *34178*	**16500** *36383*	**17000** *37485*	**18000** *39690*	**19000** *41895*		

COMMERCIAL DESCRIPTION	CAI *MSPN*	Max. dist./ hour **km** *mile*	TKPH [1] *TMPH*	e **mm** *inch*	D **mm** *inch*	R' **mm** *inch*	RC **mm** *inch*	Tread depth **mm** *32rd*	Dual Spacing **mm** *inch*	Cap. **liter** *gallon*	Measuring [2] [3] Recommended Rim	Other Approved [2] [3] Rims
XADN+ E3 ** 200B 29.5 R 25 Tubeless	**597428** *40883*	**28** *17.4*	**314** *215*	**767** *30.2*	**1858** *73.1*	**826** *32.5*	**5578** *219.6*	**44** *55.4*		**1221** *322.6*	**25.00/3.5**	
Bar *Psi*	**2** *29*	**2.5** *36*	**3** *44*	**3.25** *47*	**3.5** *51*	**4** *58*	**4.5** *65*	**5** *73*				
Machine - Use (**kg** - *lbs*)	**ARTICULATED DUMP TRUCKS**											
STANDARD		**7800** *17199*	**9050** *19955*	**9675** *21333*	**10300** *22712*	**11500** *25358*	**12750** *28114*	**14000** *30870*				

COMMERCIAL DESCRIPTION	CAI *MSPN*	Max. dist./ hour **km** *mile*	TKPH [1] *TMPH*	e **mm** *inch*	D **mm** *inch*	R' **mm** *inch*	RC **mm** *inch*	Tread depth **mm** *32rd*	Dual Spacing **mm** *inch*	Cap. **liter** *gallon*	Measuring [2] [3] Recommended Rim	Other Approved [2] [3] Rims
XADN+ B4 E3 ** 200B 29.5 R 25 Tubeless	**101786** *18042*	**28** *17.4*	**314** *215*	**767** *30.2*	**1858** *73.1*	**826** *32.5*	**5578** *219.6*	**44** *55.4*		**1221** *322.6*	**25.00/3.5**	
Bar *Psi*	**2** *29*	**2.5** *36*	**3** *44*	**3.25** *47*	**3.5** *51*	**4** *58*	**4.5** *65*	**5** *73*				
Machine - Use (**kg** - *lbs*)	**ARTICULATED DUMP TRUCKS**											
STANDARD		**7800** *17199*	**9050** *19955*	**9675** *21333*	**10300** *22712*	**11500** *25358*	**12750** *28114*	**14000** *30870*				

TIRE LOAD IN KG/LB – TIRE PRESSURE IN BAR/PSI

COMMERCIAL DESCRIPTION	CAI *MSPN*	Max. dist./ hour **km** *mile*	**TKPH** [1] *TMPH*	e **mm** *inch*	D **mm** *inch*	R' **mm** *inch*	RC **mm** *inch*	Tread depth **mm** *32rd*	Dual Spacing **mm** *inch*	Cap. **liter** *gallon*	Measuring [2] [3] Recommended Rim	Other Approved [2] [3] Rims
XHA2 L3 ** 216A2 29.5 R 25 Tubeless	**961307** *82493*	**16** *9.9*		**747** *29.4*	**1860** *73.2*	**795** *31.3*	**5504** *216.7*	**43** *54.2*		**1177** *311*	**25.00/3.5**	

Bar *Psi*	**2** *29*	**2.5** *36*	**3** *44*	**3.5** *51*	**4** *58*	**4.5** *65*	**5** *73*	**5.5** *80*
Machine - Use (**kg** - *lbs*)	**LOADERS**							
FRONT LADEN	**11150** *24586*	**12300** *27122*	**14600** *32193*	**16300** *35942*	**18000** *39690*	**19450** *42887*	**20950** *46195*	**22400** *49392*
REAR UNLADEN	**8900** *19625*	**9850** *21719*	**11700** *25799*	**13050** *28775*	**14400** *31752*	**15550** *34288*	**16750** *36934*	**17900** *39470*

COMMERCIAL DESCRIPTION	CAI *MSPN*	Max. dist./ hour **km** *mile*	**TKPH** [1] *TMPH*	e **mm** *inch*	D **mm** *inch*	R' **mm** *inch*	RC **mm** *inch*	Tread depth **mm** *32rd*	Dual Spacing **mm** *inch*	Cap. **liter** *gallon*	Measuring [2] [3] Recommended Rim	Other Approved [2] [3] Rims
XK A L3 ** 29.5 R 25 Tubeless (8 - 12)	**273560** *28209*	**14** *8.7*		**793** *31.2*	**1862** *73.3*	**802** *31.6*	**5525** *217.5*	**38** *47.9*		**1145** *302.5*	**25.00/3.5**	

Bar *Psi*	**2** *29*	**2.5** *36*	**3** *44*	**3.5** *51*	**4** *58*	**4.5** *65*	**5** *73*	**5.5** *80*
Machine - Use (**kg** - *lbs*)	**LOADERS**							
FRONT LADEN	**11150** *24586*	**12300** *27122*	**14600** *32193*	**16300** *35942*	**18000** *39690*	**19450** *42887*	**20950** *46195*	**22400** *49392*
REAR UNLADEN	**8900** *19625*	**9850** *21719*	**11700** *25799*	**13050** *28775*	**14400** *31752*	**15550** *34288*	**16750** *36934*	**17900** *39470*
Machine - Use (**kg** - *lbs*)	**UNDERGROUND TRANSPORT MACHINE**							
ALL AXLES			**10900** *24035*	**12150** *26791*	**13600** *29988*	**15000** *33075*	**16000** *35280*	**17500** *38588*

COMMERCIAL DESCRIPTION	CAI *MSPN*	Max. dist./ hour **km** *mile*	**TKPH** [1] *TMPH*	e **mm** *inch*	D **mm** *inch*	R' **mm** *inch*	RC **mm** *inch*	Tread depth **mm** *32rd*	Dual Spacing **mm** *inch*	Cap. **liter** *gallon*	Measuring [2] [3] Recommended Rim	Other Approved [2] [3] Rims
XLD D1 A L4R * 29.5 R 25 Tubeless	**123741** *90432*	**14** *8.7*		**769** *30.3*	**1906** *75*	**821** *32.3*	**5656** *222.7*	**58** *73.1*		**1171** *309.4*	**25.00/3.5**	

Bar *Psi*	**2** *29*	**2.5** *36*	**3** *44*	**3.5** *51*	**4** *58*	**4.5** *65*	**5** *73*	**5.5** *80*
Machine - Use (**kg** - *lbs*)	**LOADERS**							
FRONT LADEN	**11150** *24586*	**12300** *27122*	**14600** *32193*	**16300** *35942*	**18000** *39690*	**19450** *42887*	**20950** *46195*	**22400** *49392*
REAR UNLADEN	**8900** *19625*	**9850** *21719*	**11700** *25799*	**13050** *28775*	**14400** *31752*	**15550** *34288*	**16750** *36934*	**17900** *39470*
Machine - Use (**kg** - *lbs*)	**UNDERGROUND TRANSPORT MACHINE**							
ALL AXLES			**10900** *24035*	**12150** *26791*	**13600** *29988*	**15000** *33075*	**16000** *35280*	**17500** *38588*

COMMERCIAL DESCRIPTION	CAI *MSPN*	Max. dist./ hour **km** *mile*	**TKPH** [1] *TMPH*	e **mm** *inch*	D **mm** *inch*	R' **mm** *inch*	RC **mm** *inch*	Tread depth **mm** *32rd*	Dual Spacing **mm** *inch*	Cap. **liter** *gallon*	Measuring [2] [3] Recommended Rim	Other Approved [2] [3] Rims
XLD D2 A L5T * 29.5 R 25 Tubeless	**123278** *28230*	**10** *6.2*		**762** *30*	**1900** *74.8*	**821** *32.3*	**5645** *222.2*	**95** *119.7*		**985** *260.2*	**25.00/3.5**	

Bar *Psi*	**2** *29*	**2.5** *36*	**3** *44*	**3.5** *51*	**4** *58*	**4.5** *65*	**5** *73*	**5.5** *80*
Machine - Use (**kg** - *lbs*)	**LOADERS**							
FRONT LADEN	**11150** *24586*	**12300** *27122*	**14600** *32193*	**16300** *35942*	**18000** *39690*	**19450** *42887*	**20950** *46195*	**22400** *49392*
REAR UNLADEN	**8900** *19625*	**9850** *21719*	**11700** *25799*	**13050** *28775*	**14400** *31752*	**15550** *34288*	**16750** *36934*	**17900** *39470*
Machine - Use (**kg** - *lbs*)	**UNDERGROUND TRANSPORT MACHINE**							
ALL AXLES			**10900** *24035*	**12150** *26791*	**13600** *29988*	**15000** *33075*	**16000** *35280*	**17500** *38588*

TIRE LOAD IN KG/LB – TIRE PRESSURE IN BAR/PSI

COMMERCIAL DESCRIPTION	CAI *MSPN*	Max. dist./ hour **km** *mile*	TKPH [1] *TMPH*	e **mm** *inch*	D **mm** *inch*	R' **mm** *inch*	RC **mm** *inch*	Tread depth **mm** *32rd*	Dual Spacing **mm** *inch*	Cap. **liter** *gallon*	Measuring [2] [3] Recommended Rim	Other Approved [2] [3] Rims
XMINE D2 L5 ** 29.5 R 25 Tubeless	**221069** *33387*	**6** *3.7*		**804** *31.7*	**1903** *74.9*	**850** *33.5*	**5725** *225.4*	**99** *124.7*		**980** *258.9*	**25.00/3.5**	
Bar *Psi*	**3** *44*	**3.5** *51*		**4** *58*	**4.5** *65*	**5** *73*		**5.5** *80*	**6** *87*	**6.5** *94*		
Machine - Use (**kg** - *lbs*)	**LOADERS**											
FRONT LADEN	**12500** *27563*	**14000** *30870*		**15500** *34178*	**17000** *37485*	**18000** *39690*		**19500** *42998*	**20600** *45423*	**22400** *49392*		
REAR UNLADEN	**10000** *22050*	**11200** *24696*		**12400** *27342*	**13600** *29988*	**14400** *31752*		**15600** *34398*	**16480** *36338*	**17920** *39514*		
Machine - Use (**kg** - *lbs*)	**UNDERGROUND TRANSPORT MACHINE**											
ALL AXLES	**10900** *24035*	**12150** *26791*		**13600** *29988*	**15000** *33075*	**16000** *35280*		**17500** *38588*	**18500** *40793*	**19500** *42998*		

COMMERCIAL DESCRIPTION	CAI *MSPN*	Max. dist./ hour **km** *mile*	TKPH [1] *TMPH*	e **mm** *inch*	D **mm** *inch*	R' **mm** *inch*	RC **mm** *inch*	Tread depth **mm** *32rd*	Dual Spacing **mm** *inch*	Cap. **liter** *gallon*	Measuring [2] [3] Recommended Rim	Other Approved [2] [3] Rims
XMINE D2 L5R 29.5 R 25 Tubeless [8]	**273527** *33522*	**6** *3.7*		**804** *31.7*	**1900** *74.8*	**838** *33*	**5688** *223.9*	**100** *126*		**988** *261*	**25.00/3.5**	
Bar *Psi*	**2** *29*	**2.5** *36*		**3** *44*	**3.5** *51*	**4** *58*		**4.5** *65*	**5** *73*	**5.5** *80*		
Machine - Use (**kg** - *lbs*)	**LOADERS**											
FRONT LADEN	**11150** *24586*	**12300** *27122*		**14600** *32193*	**16300** *35942*	**18000** *39690*		**19450** *42887*	**20950** *46195*	**22400** *49392*		
REAR UNLADEN	**8900** *19625*	**9850** *21719*		**11700** *25799*	**13050** *28775*	**14400** *31752*		**15550** *34288*	**16750** *36934*	**17900** *39470*		
Machine - Use (**kg** - *lbs*)	**UNDERGROUND TRANSPORT MACHINE**											
ALL AXLES				**10900** *24035*	**12150** *26791*	**13600** *29988*		**15000** *33075*	**16000** *35280*	**17500** *38588*		

COMMERCIAL DESCRIPTION	CAI *MSPN*	Max. dist./ hour **km** *mile*	TKPH [1] *TMPH*	e **mm** *inch*	D **mm** *inch*	R' **mm** *inch*	RC **mm** *inch*	Tread depth **mm** *32rd*	Dual Spacing **mm** *inch*	Cap. **liter** *gallon*	Measuring [2] [3] Recommended Rim	Other Approved [2] [3] Rims
XMINE D2 PRO L5 29.5 R 25 Tubeless [8]	**326526** *92460*	**6** *3.7*		**806** *31.7*	**1891** *74.4*	**836** *32.9*	*5667* *223.1*	**99** *124.7*		**980** *258.9*	**25.00/3.5**	
Bar *Psi*	**3** *44*	**3.5** *51*		**4** *58*	**4.5** *65*	**5** *73*		**5.5** *80*	**6** *87*	**6.5** *94*	**7** *102*	
Machine - Use (**kg** - *lbs*)	**LOADERS**											
FRONT LADEN	**12500** *27563*	**14000** *30870*		**15500** *34178*	**17000** *37485*	**18000** *39690*		**19500** *42998*	**20600** *45423*	**22400** *49392*	**25750** *56779*	
REAR UNLADEN	**1000** *2205*	**11200** *24696*		**12400** *27342*	**13600** *29988*	**14400** *31752*		**15600** *34398*	**16480** *36338*	**17920** *39514*	*20600* *45423*	
Machine - Use (**kg** - *lbs*)	**UNDERGROUND TRANSPORT MACHINE**											
ALL AXLES	**10900** *24035*	**12150** *26791*		**13600** *29988*	**15000** *33075*	**16000** *35280*		**17500** *38588*	**18500** *40793*	**19500** *42998*	**23000** *50715*	

COMMERCIAL DESCRIPTION	CAI *MSPN*	Max. dist./ hour **km** *mile*	TKPH [1] *TMPH*	e **mm** *inch*	D **mm** *inch*	R' **mm** *inch*	RC **mm** *inch*	Tread depth **mm** *32rd*	Dual Spacing **mm** *inch*	Cap. **liter** *gallon*	Measuring [2] [3] Recommended Rim	Other Approved [2] [3] Rims
XADN E E3V ** 200E 29.5 R 25 Tubeless	**123703**	**50** *31.1*	**560** *384*	**743** *29.3*	**1850** *72.8*	**817** *32.2*	**5541** *218.1*	**44** *55.4*		**1180** *311.8*	**25.00/3.5**	
Bar *Psi*	**2** *29*	**2.5** *36*		**3** *44*	**3.25** *47*	**3.5** *51*		**4** *58*	**4.5** *65*	**5** *73*	**5.5** *80*	
Machine - Use (**kg** - *lbs*)	**ARTICULATED DUMP TRUCKS**											
STANDARD	**7800** *17199*	**9050** *19955*		**10300** *22712*	**10900** *24035*	**11500** *25358*		**12750** *28114*	**14000** *30870*			
70 KM/H *43 MPH*				**7800** *17199*	**8575** *18908*	**9350** *20617*		**10900** *24035*	**11500** *25358*	**12750** *28114*	**14000** *30870*	

TIRE LOAD IN KG/LB – TIRE PRESSURE IN BAR/PSI

COMMERCIAL DESCRIPTION	CAI *MSPN*	Max. dist./ hour **km** *mile*	TKPH [1] *TMPH*	e **mm** *inch*	D **mm** *inch*	R' **mm** *inch*	RC **mm** *inch*	Tread depth **mm** *32rd*	Dual Spacing **mm** *inch*	Cap. **liter** *gallon*	Measuring [2] [3] Recommended Rim	Other Approved [2] [3] Rims
XS SAND E7 ** 196E 29.5 R 25 Tubeless [9]	458236 *01330*			747 *29.4*	1820 *71.7*	796 *31.3*	5431 *213.8*	22 *27.7*		1200 *317*	25.00/3.5	
Bar *Psi*	2 *29*	2.3 *33*		2.5 *36*	2.7 *39*	2.9 *42*		3.3 *48*	3.7 *54*	4.1 *59*	4.5 *65*	4.9 *71*
Machine - Use (**kg** - *lbs*)	**DESERT CONDITIONS 65 KM/H MAX.**											
ROAD IN SINGLE									11000 *24255*	12000 *26460*	13000 *28665*	14000 *30870*
TRACK IN SINGLE								11000 *24255*	12000 *26460*	13000 *28665*	14000 *30870*	
SAND IN SINGLE	11000 *24255*	12000 *26460*	12500 *27563*	13000 *28665*	14000 *30870*							
Bar *Psi*	2 *29*	2.5 *36*	3 *44*	3.25 *47*	3.5 *51*			4 *58*	4.5 *65*	5 *73*	5.5 *80*	
Machine - Use (**kg** - *lbs*)	**ARTICULATED DUMP TRUCKS**											
STANDARD	7800 *17199*	9050 *19955*	10300 *22712*	10900 *24035*	11500 *25358*			12750 *28114*	14000 *30870*			
70 KM/H *43 MPH*			7800 *17199*	8575 *18908*	9350 *20617*			10900 *24035*	11500 *25358*	12750 *28114*	14000 *30870*	

COMMERCIAL DESCRIPTION	CAI *MSPN*	Max. dist./ hour **km** *mile*	TKPH [1] *TMPH*	e **mm** *inch*	D **mm** *inch*	R' **mm** *inch*	RC **mm** *inch*	Tread depth **mm** *32rd*	Dual Spacing **mm** *inch*	Cap. **liter** *gallon*	Measuring [2] [3] Recommended Rim	Other Approved [2] [3] Rims
XTRA DEFEND E4 ** 200B 29.5 R 25 Tubeless	940473 *07272*	22 *13.7*	246 *169*	773 *30.4*	1862 *73.3*	826 *32.5*	5586 *219.9*	65 *81.9*		1142 *301.7*	25.00/3.5	
Bar *Psi*	2 *29*	2.5 *36*	3 *44*	3.25 *47*	3.5 *51*			4 *58*	4.5 *65*			
Machine - Use (**kg** - *lbs*)	**ARTICULATED DUMP TRUCKS**											
STANDARD	7800 *17199*	9050 *19955*	10300 *22712*	10900 *24035*	11500 *25358*			12750 *28114*	14000 *30870*			

COMMERCIAL DESCRIPTION	CAI *MSPN*	Max. dist./ hour **km** *mile*	TKPH [1] *TMPH*	e **mm** *inch*	D **mm** *inch*	R' **mm** *inch*	RC **mm** *inch*	Tread depth **mm** *32rd*	Dual Spacing **mm** *inch*	Cap. **liter** *gallon*	Measuring [2] [3] Recommended Rim	Other Approved [2] [3] Rims
XTXL E4 ** L4 *** 221A2 29.5 R 25 Tubeless**	427926 *40734*	14 *8.7 if load per tire <=22.4 t* 12 *7.5 if load per tire >22.4 t*	220 *151*	775 *30.5*	1822 *71.7*	793 *31.2*	5427 *213.7*	59 *74.3*		1029 *271.9*	25.00/3.5	
Bar *Psi*	3 *44*	4 *58*	4.5 *65*	5 *73*	5.5 *80*			6 *87*	6.5 *94*	7 *102*	7.5 *109*	8 *116*
Machine - Use (**kg** - *lbs*)	**LOADER LOAD PER TIRE <= 22.4 T**											
FRONT LADEN	12500 *27563*	15500 *34178*	17000 *37485*	18000 *39690*	19500 *42998*			20600 *45423*	22400 *49392*			
REAR UNLADEN	10000 *22050*	12400 *27342*	13600 *29988*	14400 *31752*	15600 *34398*			16480 *36338*	17920 *39514*			
Machine - Use (**kg** - *lbs*)	**LOADER LOAD PER TIRE > 22.4 T**											
FRONT LADEN										23600 *52038*	24300 *53582*	25750 *56779*
REAR UNLADEN										18880 *41630*	19440 *42865*	20600 *45423*
Machine - Use (**kg** - *lbs*)	**UNDERGROUND TRANSPORT MACHINE**											
ALL AXLES	10900 *24035*	13600 *29988*	15000 *33075*	16000 *35280*	17500 *38588*			18500 *40793*	19500 *42998*	20600 *45423*	21800 *48069*	23000 *50715*

BLOCK HANDLING (SEE DETAILS IN THE SECTION: HELP WITH THE USE OF EARTHMOVER TIRES)

TIRE LOAD IN KG/LB – TIRE PRESSURE IN BAR/PSI

COMMERCIAL DESCRIPTION	CAI *MSPN*	Max. dist./ hour **km** *mile*	TKPH [1] *TMPH*	e **mm** *inch*	D **mm** *inch*	R' **mm** *inch*	RC **mm** *inch*	Tread depth **mm** *32rd*	Dual Spacing **mm** *inch*	Cap. **liter** *gallon*	Measuring [2] [3] Recommended Rim	Other Approved [2] [3] Rims
XTXL E4 **** **29.5 R 25 Tubeless**	**775766** *76493*		**220** *151*	**775** *30.5*	**1822** *71.7*	**804** *31.7*	**5455** *214.8*	**59** *74.3*		**1029** *271.9*	**25.00/3.5**	
Bar *Psi*	**3** *44*	**4** *58*	**4.5** *65*	**5** *73*	**5.5** *80*	**6** *87*	**6.5** *94*	**7** *102*	**7.5** *109*	**8** *116*		
Machine - Use (**kg** - *lbs*)	**UNDERGROUND TRANSPORT MACHINE**											
ALL AXLES	**10900** *24035*	**13600** *29988*	**15000** *33075*	**16000** *35280*	**17500** *38588*	**18500** *40793*	**19500** *42998*	**20600** *45423*	**21800** *48069*	**23000** *50715*		

COMMERCIAL DESCRIPTION	CAI *MSPN*	Max. dist./ hour **km** *mile*	TKPH [1] *TMPH*	e **mm** *inch*	D **mm** *inch*	R' **mm** *inch*	RC **mm** *inch*	Tread depth **mm** *32rd*	Dual Spacing **mm** *inch*	Cap. **liter** *gallon*	Measuring [2] [3] Recommended Rim	Other Approved [2] [3] Rims
XAD 65-1 SUPER E3T ** 190B **750/65 R 25 Tubeless**	**123895** *79374*	**28** *17.4*	**237** *162*	**738** *29.1*	**1599** *63*	**701** *27.6*	**4777** *188.1*	**43** *54.2*		**810** *214*	**24.00/3.0**	22.00/3.0 25.00/3.0
Bar *Psi*	**2.5** *36*	**3** *44*	**3.25** *47*	**3.5** *51*	**4** *58*							
Machine - Use (**kg** - *lbs*)	**ARTICULATED DUMP TRUCKS**											
STANDARD	**7350** *16207*	**8400** *18522*	**8950** *19735*	**9500** *20948*	**10600** *23373*							

COMMERCIAL DESCRIPTION	CAI *MSPN*	Max. dist./ hour **km** *mile*	TKPH [1] *TMPH*	e **mm** *inch*	D **mm** *inch*	R' **mm** *inch*	RC **mm** *inch*	Tread depth **mm** *32rd*	Dual Spacing **mm** *inch*	Cap. **liter** *gallon*	Measuring [2] [3] Recommended Rim	Other Approved [2] [3] Rims
XTRA DEFEND 190B **750/65 R 25 Tubeless**	**209221** *32588*	**26** *16.2*	**220** *151*	**733** *28.9*	**1628** *64.1*	**720** *28.3*	**4878** *192*	**55** *69.3*			**24.00/3.0**	22.00/3.0 25.00/3.0
Bar *Psi*	**2.5** *36*	**3** *44*	**3.25** *47*	**3.5** *51*	**4** *58*							
Machine - Use (**kg** - *lbs*)	**ARTICULATED DUMP TRUCKS**											
STANDARD	**7350** *16207*	**8400** *18522*	**8950** *19735*	**9500** *20948*	**10600** *23373*							

COMMERCIAL DESCRIPTION	CAI *MSPN*	Max. dist./ hour **km** *mile*	TKPH [1] *TMPH*	e **mm** *inch*	D **mm** *inch*	R' **mm** *inch*	RC **mm** *inch*	Tread depth **mm** *32rd*	Dual Spacing **mm** *inch*	Cap. **liter** *gallon*	Measuring [2] [3] Recommended Rim	Other Approved [2] [3] Rims
XLD 65 L3T * **750/65 R 25 Tubeless**	**123940** *50629*	**16** *9.9*		**747** *29.4*	**1591** *62.6*	**683** *26.9*	**4714** *185.6*	**41** *51.7*		**788** *208.2*	**24.00/3.0**	22.00/3.0
Bar *Psi*	**2** *29*	**2.5** *36*	**3** *44*	**3.25** *47*	**3.5** *51*	**4** *58*	**4.5** *65*	**5** *73*	**5.5** *80*			
Machine - Use (**kg** - *lbs*)	**LOADERS**											
FRONT LADEN	**8400** *18522*	**9720** *21433*	**11040** *24343*	**11700** *25799*	**12360** *27254*	**13680** *30164*	**15000** *33075*	**16320** *35986*	**17640** *38896*			
REAR UNLADEN	**6725** *14829*	**7775** *17144*	**8825** *19459*	**9365** *20650*	**9900** *21830*	**10950** *24145*	**12000** *26460*	**13050** *28775*	**14100** *31091*			
Machine - Use (**kg** - *lbs*)	**GRADERS**											
ALL AXLES	**5040** *11113*	**5830** *12855*	**6620** *14597*	**7020** *15479*	**7420** *16361*	**8210** *18103*						

TIRE LOAD IN KG/LB – TIRE PRESSURE IN BAR/PSI

29"

COMMERCIAL DESCRIPTION	CAI *MSPN*	Max. dist./ hour **km** *mile*	TKPH [1] *TMPH*	e **mm** *inch*	D **mm** *inch*	R' **mm** *inch*	RC **mm** *inch*	Tread depth **mm** *32rd*	Dual Spacing **mm** *inch*	Cap. **liter** *gallon*	Measuring [2] [3] Recommended Rim	Other Approved [2] [3] Rims
XK A L3 ** **26.5 R 29 Tubeless (8 - 9)**	**273860** *21675*	**14** *8.7*		**712** *28*	**1840** *72.4*	**801** *31.5*	**5478** *215.7*	**35** *44.1*		**855** *225.9*	**22.00/3.0**	24.00/3.0

Bar *Psi*	**4** *58*	**4.25** *62*	**4.5** *65*	**5** *73*	**5.25** *76*	**5.5** *80*	**5.75** *83*	**6** *87*	**6.25** *91*	**6.5** *94*
Machine - Use (**kg** - *lbs*)	**LOADERS**									
FRONT LADEN	**13600** *29988*	**14000** *30870*	**15000** *33075*	**16000** *35280*	**16500** *36383*	**17500** *38588*	**18000** *39690*	**18500** *40793*	**19000** *41895*	**19500** *42998*
REAR UNLADEN	**10880** *23990*	**11200** *24696*	**12000** *26460*	**12800** *28224*	**13200** *29106*	**14000** *30870*	**14400** *31752*	**14800** *32634*	**15200** *33516*	**15600** *34398*
Machine - Use (**kg** - *lbs*)	**UNDERGROUND TRANSPORT MACHINE**									
ALL AXLES	**12150** *26791*	**12500** *27563*	**13200** *29106*	**14500** *31973*	**15000** *33075*	**15500** *34178*	**16000** *35280*	**16500** *36383*	**17000** *37485*	**17500** *38588*

COMMERCIAL DESCRIPTION	CAI *MSPN*	Max. dist./ hour **km** *mile*	TKPH [1] *TMPH*	e **mm** *inch*	D **mm** *inch*	R' **mm** *inch*	RC **mm** *inch*	Tread depth **mm** *32rd*	Dual Spacing **mm** *inch*	Cap. **liter** *gallon*	Measuring [2] [3] Recommended Rim	Other Approved [2] [3] Rims
XSM DN L3S * **26.5 R 29 Tubeless** [9]	**123661**	**10** *6.2*		**726** *28.6*	**1830** *72*	**811** *31.9*	**5488** *216.1*	**40** *50.4*		**937** *247.6*	**22.00/3.0**	24.00/3.0

Bar *Psi*	**4** *58*	**4.25** *62*	**4.5** *65*	**5** *73*	**5.25** *76*	**5.5** *80*	**5.75** *83*	**6** *87*	**6.25** *91*	**6.5** *94*
Machine - Use (**kg** - *lbs*)	**LOADERS**									
FRONT LADEN	**13600** *29988*	**14000** *30870*	**15000** *33075*	**16000** *35280*	**16500** *36383*	**17500** *38588*	**18000** *39690*	**18500** *40793*	**19000** *41895*	**19500** *42998*
REAR UNLADEN	**10880** *23990*	**11200** *24696*	**12000** *26460*	**12800** *28224*	**13200** *29106*	**14000** *30870*	**14400** *31752*	**14800** *32634*	**15200** *33516*	**15600** *34398*
Machine - Use (**kg** - *lbs*)	**UNDERGROUND TRANSPORT MACHINE**									
ALL AXLES	**12150** *26791*	**12500** *27563*	**13200** *29106*	**14500** *31973*	**15000** *33075*	**15500** *34178*	**16000** *35280*	**16500** *36383*	**17000** *37485*	**17500** *38588*

COMMERCIAL DESCRIPTION	CAI *MSPN*	Max. dist./ hour **km** *mile*	TKPH [1] *TMPH*	e **mm** *inch*	D **mm** *inch*	R' **mm** *inch*	RC **mm** *inch*	Tread depth **mm** *32rd*	Dual Spacing **mm** *inch*	Cap. **liter** *gallon*	Measuring [2] [3] Recommended Rim	Other Approved [2] [3] Rims
XSM DN+ L3S *** **26.5 R 29 Tubeless**	**317097** *02315*	**10** *6.2*		**698** *27.5*	**1830** *72*	**820** *32.3*	**5510** *216.9*	**44** *55.4*		**926** *244.6*	**22.00/3.0**	24.00/3.0

Bar *Psi*	**5** *73*	**5.5** *80*	**6** *87*	**6.5** *94*	**6.75** *98*	**7** *102*	**7.25** *105*	**7.5** *109*	**7.75** *112*	**8** *116*
Machine - Use (**kg** - *lbs*)	**LOADER**									
FRONT LADEN	**16000** *35280*	**17500** *38588*	**18500** *40793*	**19500** *42998*	**20000** *44100*	**20600** *45423*	**21200** *46746*	**21800** *48069*	**22400** *49392*	**23000** *50715*
REAR UNLADEN	**12800** *28224*	**14000** *30870*	**14800** *32634*	**15600** *34398*	**16000** *35280*	**16480** *36338*	**16960** *37397*	**17440** *38455*	**17920** *39514*	**18400** *40572*

COMMERCIAL DESCRIPTION	CAI *MSPN*	Max. dist./ hour **km** *mile*	TKPH [1] *TMPH*	e **mm** *inch*	D **mm** *inch*	R' **mm** *inch*	RC **mm** *inch*	Tread depth **mm** *32rd*	Dual Spacing **mm** *inch*	Cap. **liter** *gallon*	Measuring [2] [3] Recommended Rim	Other Approved [2] [3] Rims
XK A L3 ** **29.5 R 29 Tubeless**	**274110** *51371*	**14** *8.7*		**793** *31.2*	**1961** *77.2*	**844** *33.2*	**5819** *229.1*	**38** *47.9*		**1260** *332.9*	**25.00/3.5**	24.00/3.5

Bar *Psi*	**3** *44*	**3.5** *51*	**4** *58*	**4.5** *65*	**5** *73*	**5.5** *80*	**6** *87*	**6.5** *94*	
Machine - Use (**kg** - *lbs*)	**LOADERS**								
FRONT LADEN	**13200** *29106*	**15000** *33075*	**16500** *36383*	**18000** *39690*	**19500** *42998*	**20600** *45423*	**22400** *49392*	**23600** *52038*	
REAR UNLADEN	**10560** *23285*	**12000** *26460*	**13200** *29106*	**14400** *31752*	**15600** *34398*	**16480** *36338*	**17920** *39514*	**18880** *41630*	
Machine - Use (**kg** - *lbs*)	**UNDERGROUND TRANSPORT MACHINE**								
ALL AXLES	**11800** *26019*	**13200** *29106*	**14500** *31973*	**16000** *35280*	**17000** *37485*	**18500** *40793*	**19500** *42998*	**20600** *45423*	

TIRE LOAD IN KG/LB – TIRE PRESSURE IN BAR/PSI

COMMERCIAL DESCRIPTION	CAI *MSPN*	Max. dist./ hour **km** *mile*	TKPH [1] *TMPH*	e **mm** *inch*	D **mm** *inch*	R' **mm** *inch*	RC **mm** *inch*	Tread depth **mm** *32rd*	Dual Spacing **mm** *inch*	Cap. **liter** *gallon*	Measuring [2] [3] Recommended Rim	Other Approved [2] [3] Rims
XTS E3T ** **29.5 R 29 Tubeless**	**708648** *46731*	**29** *18*	**348** *238*	**765** *30.1*	**1963** *77.3*	**869** *34.2*	**5884** *231.7*	**43** *54.2*		**1300** *343.5*	**25.00/3.5**	24.00/3.5
Bar *Psi*	**2** *29*	**2.5** *36*	**3** *44*	**3.5** *51*	**4** *58*	**4.25** *62*	**4.5** *65*	**5** *73*	**5.5** *80*			
Machine - Use (**kg** - *lbs*)	**TRANSPORT**											
STANDARD	**9150** *20176*	**10325** *22767*	**11500** *25358*	**12650** *27893*	**13850** *30539*	**14425** *31807*	**15000** *33075*	**16150** *35611*	**16750** *36934*			

COMMERCIAL DESCRIPTION	CAI *MSPN*	Max. dist./ hour **km** *mile*	TKPH [1] *TMPH*	e **mm** *inch*	D **mm** *inch*	R' **mm** *inch*	RC **mm** *inch*	Tread depth **mm** *32rd*	Dual Spacing **mm** *inch*	Cap. **liter** *gallon*	Measuring [2] [3] Recommended Rim	Other Approved [2] [3] Rims
XMINE D2 L5R **29.5 R 29 Tubeless** [8]	**274050** *29173*	**6** *3.7*		**796** *31.3*	**2001** *78.8*	**878** *34.6*	**5980** *235.4*	**100** *126*		**990** *261.6*	**25.00/3.5**	24.00/3.5
Bar *Psi*	**2** *29*	**2.5** *36*	**3** *44*	**3.5** *51*	**4** *58*	**4.5** *65*	**5** *73*	**5.5** *80*				
Machine - Use (**kg** - *lbs*)	**LOADERS**											
FRONT LADEN	**13100** *28886*	**14700** *32414*	**16300** *35942*	**17900** *39470*	**19500** *42998*	**21550** *47518*	**23600** *52038*	**25200** *55566*				
REAR UNLADEN	**10500** *23153*	**11750** *25909*	**13050** *28775*	**14350** *31642*	**15600** *34398*	**17250** *38036*	**18900** *41675*	**21150** *46636*				
Machine - Use (**kg** - *lbs*)	**UNDERGROUND TRANSPORT MACHINE**											
ALL AXLES			**11800** *26019*	**13200** *29106*	**14500** *31973*	**16000** *35280*	**17000** *37485*	**18500** *40793*				

COMMERCIAL DESCRIPTION	CAI *MSPN*	Max. dist./ hour **km** *mile*	TKPH [1] *TMPH*	e **mm** *inch*	D **mm** *inch*	R' **mm** *inch*	RC **mm** *inch*	Tread depth **mm** *32rd*	Dual Spacing **mm** *inch*	Cap. **liter** *gallon*	Measuring [2] [3] Recommended Rim	Other Approved [2] [3] Rims
XMINE D2 PRO L5 *** **29.5 R 29 Tubeless**	**376767** *28327*	**6** *3.7*		**805** *31.7*	**1994** *78.5*	**882** *34.7*	**5975** *235.2*	**100** *126*		**981** *259.2*	**25.00/3.5**	24.00/3.5
Bar *Psi*	**3** *44*	**3.5** *51*	**4** *58*	**4.5** *65*	**5** *73*	**5.5** *80*	**6** *87*	**6.5** *94*	**7** *102*			
Machine - Use (**kg** - *lbs*)	**LOADERS**											
FRONT LADEN	**13200** *29106*	**15000** *33075*	**16500** *36383*	**18000** *39690*	**19500** *42998*	**20600** *45423*	**22400** *49392*	**23600** *52038*	**27250** *60086*			
REAR UNLADEN	**10560** *23285*	**12000** *26460*	**13200** *29106*	**14400** *31752*	**15600** *34398*	**16480** *36338*	**17920** *39514*	**18880** *41630*	**21800** *48069*			
Machine - Use (**kg** - *lbs*)	**UNDERGROUND TRANSPORT MACHINE**											
ALL AXLES	**11800** *26019*	**13200** *29106*	**14500** *31973*	**16000** *35280*	**17000** *37485*	**18500** *40793*	**19500** *42998*	**20600** *45423*	**24300** *53582*			

COMMERCIAL DESCRIPTION	CAI *MSPN*	Max. dist./ hour **km** *mile*	TKPH [1] *TMPH*	e **mm** *inch*	D **mm** *inch*	R' **mm** *inch*	RC **mm** *inch*	Tread depth **mm** *32rd*	Dual Spacing **mm** *inch*	Cap. **liter** *gallon*	Measuring [2] [3] Recommended Rim	Other Approved [2] [3] Rims
XSM D2+ L5S ** **29.5 R 29 Tubeless**	**358035** *93004*	**4** *2.5*		**770** *30.3*	**1994** *78.5*	**893** *35.2*	**6003** *236.3*	**112** *141.1*		**1123** *296.7*	**25.00/3.5**	24.00/3.5
Bar *Psi*	**3** *44*	**3.5** *51*	**4** *58*	**4.5** *65*	**5** *73*	**5.5** *80*	**6** *87*	**6.5** *94*				
Machine - Use (**kg** - *lbs*)	**LOADERS**											
FRONT LADEN	**13200** *29106*	**15000** *33075*	**16500** *36383*	**18000** *39690*	**19500** *42998*	**20600** *45423*	**22400** *49392*	**23600** *52038*				
REAR UNLADEN	**10560** *23285*	**12000** *26460*	**13200** *29106*	**14400** *31752*	**15600** *34398*	**16480** *36338*	**17920** *39514*	**18880** *41630*				

TIRE LOAD IN KG/LB – TIRE PRESSURE IN BAR/PSI

COMMERCIAL DESCRIPTION	CAI *MSPN*	Max. dist./ hour **km** *mile*	TKPH [1] *TMPH*	e **mm** *inch*	D **mm** *inch*	R' **mm** *inch*	RC **mm** *inch*	Tread depth **mm** *32rd*	Dual Spacing **mm** *inch*	Cap. **liter** *gallon*	Measuring [2] [3] Recommended Rim	Other Approved [2] [3] Rims
XSMD2+ PRO L5S * 29.5 R 29 Tubeless**	**819333** *22462*	**4** *2.5*		**770** *30.3*	**1993** *78.5*	**883** *34.8*	**5977** *235.3*	**112** *141.1*		**1123** *296.7*	**25.00/3.5**	24.00/3.5

Bar *Psi*	**3** *44*	**3.5** *51*	**4** *58*	**4.5** *65*	**5** *73*	**5.5** *80*	**6** *87*	**6.5** *94*	**7** *102*
Machine - Use (**kg** - *lbs*)	**LOADERS**								
FRONT LADEN	**13200** *29106*	**15000** *33075*	**16500** *36383*	**18000** *39690*	**19500** *42998*	**20600** *45423*	**22400** *49392*	**23600** *52038*	**27250** *60086*
REAR UNLADEN	**10560** *23285*	**12000** *26460*	**13200** *29106*	**14400** *31752*	**15600** *34398*	**16480** *36338*	**17920** *39514*	**18880** *41630*	**21800** *48069*

COMMERCIAL DESCRIPTION	CAI *MSPN*	Max. dist./ hour **km** *mile*	TKPH [1] *TMPH*	e **mm** *inch*	D **mm** *inch*	R' **mm** *inch*	RC **mm** *inch*	Tread depth **mm** *32rd*	Dual Spacing **mm** *inch*	Cap. **liter** *gallon*	Measuring [2] [3] Recommended Rim	Other Approved [2] [3] Rims
XLD D2 A L5T * 29.5 R 29 Tubeless	**123279** *52185*	**10** *6.2*		**772** *30.4*	**2004** *78.9*	**864** *34*	**5949** *234.2*	**95** *119.7*		**985** *260.2*	**25.00/3.5**	24.00/3.5

Bar *Psi*	**2** *29*	**2.5** *36*	**3** *44*	**3.5** *51*	**4** *58*	**4.5** *65*	**5** *73*	**5.25** *76*	**5.5** *80*
Machine - Use (**kg** - *lbs*)	**LOADERS**								
FRONT LADEN	**13100** *28886*	**14700** *32414*	**16300** *35942*	**17900** *39470*	**19500** *42998*	**21550** *47518*	**23600** *52038*	**24450** *53912*	**25200** *55566*
REAR UNLADEN	**10500** *23153*	**11750** *25909*	**13050** *28775*	**14350** *31642*	**15600** *34398*	**17250** *38036*	**18900** *41675*	**10560** *23285*	**21150** *46636*
Machine - Use (**kg** - *lbs*)	**GRADERS**								
ALL AXLES	**7100** *15656*	**8500** *18743*	**9750** *21499*	**10900** *24035*	**12150** *26791*	**13200** *29106*	**14500** *31973*	**15000** *33075*	

COMMERCIAL DESCRIPTION	CAI *MSPN*	Max. dist./ hour **km** *mile*	TKPH [1] *TMPH*	e **mm** *inch*	D **mm** *inch*	R' **mm** *inch*	RC **mm** *inch*	Tread depth **mm** *32rd*	Dual Spacing **mm** *inch*	Cap. **liter** *gallon*	Measuring [2] [3] Recommended Rim	Other Approved [2] [3] Rims
XTXL E4 ** 29.5 R 29 Tubeless**	**512305** *68037*		**220** *151*	**775** *30.5*	**1928** *75.9*	**855** *33.7*	**5783** *227.7*	**63** *79.4*		**1139** *300.9*	**25.00/3.5**	24.00/3.5

Bar *Psi*	**3** *44*	**4** *58*	**4.5** *65*	**5** *73*	**5.5** *80*	**6** *87*	**6.5** *94*	**7** *102*	**7.5** *109*	**8** *116*
Machine - Use (**kg** - *lbs*)	**UNDERGROUND TRANSPORT MACHINE**									
ALL AXLES	**11800** *26019*	**14500** *31973*	**16000** *35280*	**17000** *37485*	**18500** *40793*	**19500** *42998*	**20600** *45423*	**21800** *48069*	**23000** *50715*	**24300** *53582*

COMMERCIAL DESCRIPTION	CAI *MSPN*	Max. dist./ hour **km** *mile*	TKPH [1] *TMPH*	e **mm** *inch*	D **mm** *inch*	R' **mm** *inch*	RC **mm** *inch*	Tread depth **mm** *32rd*	Dual Spacing **mm** *inch*	Cap. **liter** *gallon*	Measuring [2] [3] Recommended Rim	Other Approved [2] [3] Rims
XAD 65-1 SUPER E3T ** 195B 775/65 R 29 Tubeless	**510085** *74895*	**28** *17.4*	**272** *186*	**785** *30.9*	**1759** *69.3*	**778** *30.6*	**5272** *207.6*	**45** *56.7*		**1050** *277.4*	**24.00/3.0**	24.00/3.5 25.00/3.5

Bar *Psi*	**2** *29*	**2.5** *36*	**3** *44*	**3.5** *51*	**4** *58*				
Machine - Use (**kg** - *lbs*)	**ARTICULATED DUMP TRUCKS**								
STANDARD	**6900** *15215*	**8100** *17861*	**9350** *20617*	**10700** *23594*	**12150** *26791*				

COMMERCIAL DESCRIPTION	CAI *MSPN*	Max. dist./ hour **km** *mile*	TKPH [1] *TMPH*	e **mm** *inch*	D **mm** *inch*	R' **mm** *inch*	RC **mm** *inch*	Tread depth **mm** *32rd*	Dual Spacing **mm** *inch*	Cap. **liter** *gallon*	Measuring [2] [3] Recommended Rim	Other Approved [2] [3] Rims
XHA2 L3 206A2 775/65 R 29 XHA2 L3 * 206A2 Tubeless	**992646**	**16** *9.9*		**780** *30.7*	**1735** *68.3*	**747** *29.4*	**5149** *202.7*	**44** *55.4*		**1008** *266.3*	**24.00/3.5**	25.00/3.5

Bar *Psi*	**3** *44*	**3.5** *51*	**4** *58*	**4.25** *62*	**4.5** *65*	**4.75** *69*	**5** *73*	**5.25** *76*
Machine - Use (**kg** - *lbs*)	**LOADERS**							
FRONT LADEN	**11750** *25909*	**13250** *29216*	**15000** *33075*	**15500** *34178*	**16500** *36383*	**17000** *37485*	**17500** *38588*	**18500** *40793*
REAR UNLADEN	**9400** *20727*	**10600** *23373*	**12000** *26460*	**12400** *27342*	**13200** *29106*	**13600** *29988*	**14000** *30870*	**14800** *32634*

TIRE LOAD IN KG/LB – TIRE PRESSURE IN BAR/PSI

COMMERCIAL DESCRIPTION	CAI *MSPN*	Max. dist./ hour **km** *mile*	**TKPH** [1] *TMPH*	e **mm** *inch*	D **mm** *inch*	R' **mm** *inch*	RC **mm** *inch*	Tread depth **mm** *32rd*	Dual Spacing **mm** *inch*	Cap. **liter** *gallon*	Measuring [2] [3] Recommended Rim	Other Approved [2] [3] Rims
XLD 65 L3 * 800/65 R 29 Tubeless	**123059** *45325*	**16** *9.9*		**793** *31.2*	**1818** *71.6*	**790** *31.1*	**5412** *213.1*	**48** *60.5*		**1093** *288.8*	**27.00/3.0**	24.00/3.5
Bar *Psi*	**2** *29*	**2.5** *36*		**3** *44*	**3.5** *51*	**4** *58*		**4.25** *62*	**4.5** *65*	**5** *73*	**5.5** *80*	
Machine - Use (**kg** - *lbs*)	**LOADERS**											
FRONT LADEN	**10100** *22271*	**11800** *26019*		**13500** *29768*	**15200** *33516*	**16900** *37265*		**17500** *38588*	**18600** *41013*	**20300** *44762*	**22000** *48510*	
REAR UNLADEN	**8100** *17861*	**9450** *20837*		**10800** *23814*	**12150** *26791*	**13500** *29768*		**14000** *30870*	**14900** *32855*	**16250** *35831*	**17600** *38808*	

COMMERCIAL DESCRIPTION	CAI *MSPN*	Max. dist./ hour **km** *mile*	**TKPH** [1] *TMPH*	e **mm** *inch*	D **mm** *inch*	R' **mm** *inch*	RC **mm** *inch*	Tread depth **mm** *32rd*	Dual Spacing **mm** *inch*	Cap. **liter** *gallon*	Measuring [2] [3] Recommended Rim	Other Approved [2] [3] Rims
XTRA DEFEND E-4 ** 209B 33.25 R 29 Tubeless	**900079** -	**26** *16.2*	**385** *264*	**857** *33.7*	**2067** *81.4*	**922** *36.3*	**6215** *244.7*	**69** *86.9*		**1542** *407.4*	**27.00/3.5**	
Bar *Psi*	**2** *29*	**2.5** *36*		**3** *44*	**3.5** *51*	**4** *58*		**4.25** *62*	**4.5** *65*	**5** *73*	**5.5** *80*	**6** *87*
Machine - Use (**kg** - *lbs*)	**TRANSPORT**											
STANDARD	**9500** *20948*	**11000** *24255*		**12500** *27563*	**14000** *30870*	**15500** *34178*		**16300** *35942*	**17000** *37485*	**18500** *40793*	**19250** *42446*	**20000** *44100*

COMMERCIAL DESCRIPTION	CAI *MSPN*	Max. dist./ hour **km** *mile*	**TKPH** [1] *TMPH*	e **mm** *inch*	D **mm** *inch*	R' **mm** *inch*	RC **mm** *inch*	Tread depth **mm** *32rd*	Dual Spacing **mm** *inch*	Cap. **liter** *gallon*	Measuring [2] [3] Recommended Rim	Other Approved [2] [3] Rims
XTS E3T ** 33.25 R 29 Tubeless	**871916** *76725*	**29** *18*	**429** *294*	**873** *34.4*	**2068** *81.4*	**923** *36.3*	**6218** *244.8*	**51** *64.3*		**1640** *433.3*	**27.00/3.5**	
Bar *Psi*	**2** *29*	**2.5** *36*		**3** *44*	**3.5** *51*	**4** *58*		**4.25** *62*	**4.5** *65*	**5** *73*	**5.5** *80*	**6** *87*
Machine - Use (**kg** - *lbs*)	**TRANSPORT**											
STANDARD	**9500** *20948*	**11000** *24255*		**12500** *27563*	**14000** *30870*	**15500** *34178*		**16300** *35942*	**17000** *37485*	**18500** *40793*	**19250** *42446*	**20000** *44100*

COMMERCIAL DESCRIPTION	CAI *MSPN*	Max. dist./ hour **km** *mile*	**TKPH** [1] *TMPH*	e **mm** *inch*	D **mm** *inch*	R' **mm** *inch*	RC **mm** *inch*	Tread depth **mm** *32rd*	Dual Spacing **mm** *inch*	Cap. **liter** *gallon*	Measuring [2] [3] Recommended Rim	Other Approved [2] [3] Rims
XAD 65-1 SUPER E3T ** 203B 875/65 R 29 Tubeless	**086953** *40269*	**28** *17.4*	**347** *238*	**883** *34.8*	**1881** *74.1*	**822** *32.4*	**5613** *221*	**51** *64.3*		**1376** *363.5*	**27.00/3.0**	27.00/3.5 28.00/3.5
Bar *Psi*	**2** *29*	**2.5** *36*		**3** *44*	**3.5** *51*	**4** *58*						
Machine - Use (**kg** - *lbs*)	**ARTICULATED DUMP TRUCKS**											
STANDARD	**9100** *20066*	**10800** *23814*		**12500** *27563*	**14100** *31091*	**15500** *34178*						

COMMERCIAL DESCRIPTION	CAI *MSPN*	Max. dist./ hour **km** *mile*	**TKPH** [1] *TMPH*	e **mm** *inch*	D **mm** *inch*	R' **mm** *inch*	RC **mm** *inch*	Tread depth **mm** *32rd*	Dual Spacing **mm** *inch*	Cap. **liter** *gallon*	Measuring [2] [3] Recommended Rim	Other Approved [2] [3] Rims
XHA2 L3 * 214A2 875/65 R 29 Tubeless	**936624** *32190*	**16** *9.9*		**882** *34.7*	**1870** *73.6*	**797** *31.4*	**5528** *217.6*	**49** *61.7*		**1354** *357.7*	**27.00/3.0**	27.00/3.5 28.00/3.5
Bar *Psi*	**2** *29*	**2.5** *36*		**3** *44*	**3.5** *51*	**4** *58*		**4.25** *62*	**4.5** *65*	**4.75** *69*		
Machine - Use (**kg** - *lbs*)	**LOADERS**											
FRONT LADEN	**9000** *19845*	**11250** *24806*		**13500** *29768*	**15750** *34729*	**18000** *39690*		**18968** *41824*	**20084** *44285*	**21200** *46746*		
REAR UNLADEN	**7200** *15876*	**9000** *19845*		**10800** *23814*	**12600** *27783*	**14400** *31752*		**15175** *33461*	**16067** *35428*	**16960** *37397*		

TIRE LOAD IN KG/LB – TIRE PRESSURE IN BAR/PSI

COMMERCIAL DESCRIPTION	CAI *MSPN*	Max. dist./ hour **km** *mile*	**TKPH** [1] *TMPH*	e **mm** *inch*	D **mm** *inch*	R' **mm** *inch*	RC **mm** *inch*	Tread depth **mm** *32rd*	Dual Spacing **mm** *inch*	Cap. **liter** *gallon*	Measuring [2] [3] Recommended Rim	Other Approved [2] [3] Rims
XTRA DEFEND 203B 875/65 R 29 Tubeless	**992223** *76545*	**22** *13.7*	**273** *187*	**872** *34.3*	**1884** *74.2*	**823** *32.4*	**5620** *221.3*	**59.5** *75*		**1330** *351.4*	**27.00/3.0**	27.00/3.5 28.00/3.5
Bar *Psi*	**2** *29*	**2.5** *36*	**3** *44*	**3.5** *51*	**4** *58*	**4.5** *65*						
Machine - Use (**kg** - *lbs*)	**ARTICULATED DUMP TRUCKS**											
STANDARD	**9000** *19845*	**10600** *23373*	**12250** *27011*	**13800** *30429*	**15500** *34178*	**17100** *37706*						

COMMERCIAL DESCRIPTION	CAI *MSPN*	Max. dist./ hour **km** *mile*	**TKPH** [1] *TMPH*	e **mm** *inch*	D **mm** *inch*	R' **mm** *inch*	RC **mm** *inch*	Tread depth **mm** *32rd*	Dual Spacing **mm** *inch*	Cap. **liter** *gallon*	Measuring [2] [3] Recommended Rim	Other Approved [2] [3] Rims
X-SUPER TERRAIN+ E4 ** 206B 800/80 R 29 Tubeless	**952451** *04779*	**26** *16.2*	**353** *242*	**805** *31.7*	**2002** *78.8*	**888** *35*	**6005** *236.4*	**67** *84.4*		**1315** *347.4*	**27.00/3.5**	25.00/3.5
Bar *Psi*	**3** *44*	**3.25** *47*	**3.5** *51*	**3.74** *54*	**4** *58*	**4.25** *62*	**4.5** *65*	**4.75** *69*	**5** *73*	**5.25** *76*		
Machine - Use (**kg** - *lbs*)	**ARTICULATED DUMP TRUCKS**											
STANDARD	**12500** *27563*	**13200** *29106*	**14000** *30870*	**14700** *32414*	**15500** *34178*	**16300** *35942*	**17000** *37485*	**17800** *39249*	**18500** *40793*	**19000** *41895*		

33"

COMMERCIAL DESCRIPTION	CAI *MSPN*	Max. dist./ hour **km** *mile*	**TKPH** [1] *TMPH*	e **mm** *inch*	D **mm** *inch*	R' **mm** *inch*	RC **mm** *inch*	Tread depth **mm** *32rd*	Dual Spacing **mm** *inch*	Cap. **liter** *gallon*	Measuring [2] [3] Recommended Rim	Other Approved [2] [3] Rims
X-HAUL E4P ** 18.00 R 33 Tubeless	**205207** *58887*	**30** *18.6*	**262** *179*	**495** *19.5*	**1860** *73.2*	**856** *33.7*	**5657** *222.7*	**49** *61.7*	**624** *24.6*	**605** *159.8*	**13.00/2.5IN**	13.00/2.5
Bar *Psi*	**4** *58*	**4.5** *65*	**5** *73*	**5.5** *80*	**6** *87*	**6.5** *94*	**7** *102*	**7.5** *109*				
Machine - Use (**kg** - *lbs*)	**TRANSPORT**											
STANDARD	**7950** *17530*	**8700** *19184*	**9400** *20727*	**10150** *22381*	**10900** *24035*	**11270** *24850*	**11650** *25688*	**12000** *26460*				

COMMERCIAL DESCRIPTION	CAI *MSPN*	Max. dist./ hour **km** *mile*	**TKPH** [1] *TMPH*	e **mm** *inch*	D **mm** *inch*	R' **mm** *inch*	RC **mm** *inch*	Tread depth **mm** *32rd*	Dual Spacing **mm** *inch*	Cap. **liter** *gallon*	Measuring [2] [3] Recommended Rim	Other Approved [2] [3] Rims
X-QUARRY S E4R ** 18.00 R 33 Tubeless	**873291** *15155*	**19** *11.8*	**166** *114*	**511** *20.1*	**1864** *73.4*	**867** *34.1*	**5693** *224.1*	**62** *78.1*	**624** *24.6*	**600** *158.5*	**13.00/2.5IN**	13.00/2.5
Bar *Psi*	**4** *58*	**4.5** *65*	**5** *73*	**5.5** *80*	**6** *87*	**6.5** *94*	**7** *102*	**7.5** *109*				
Machine - Use (**kg** - *lbs*)	**TRANSPORT**											
STANDARD	**7950** *17530*	**8700** *19184*	**9400** *20727*	**10150** *22381*	**10900** *24035*	**11270** *24850*	**11650** *25688*	**12000** *26460*				

COMMERCIAL DESCRIPTION	CAI *MSPN*	Max. dist./ hour **km** *mile*	**TKPH** [1] *TMPH*	e **mm** *inch*	D **mm** *inch*	R' **mm** *inch*	RC **mm** *inch*	Tread depth **mm** *32rd*	Dual Spacing **mm** *inch*	Cap. **liter** *gallon*	Measuring [2] [3] Recommended Rim	Other Approved [2] [3] Rims
XTRA LOAD GRIP B E4 * 18.00 R 33 Tubeless**	**553513** *12079*	**34** *21.1* if load per tire <=10.9 t **31** *19.3* if load per tire >10.9 t	**301** *206*	**497** *19.6*	**1872** *73.7*			**60** *75.6*	**598** *23.5*	**603** *159.3*	**13.00/2.5IN**	13.00/2.5
Bar *Psi*	**4** *58*	**4.5** *65*	**5** *73*	**5.5** *80*	**6** *87*	**6.5** *94*	**7** *102*	**7.5** *109*	**8** *116*			
Machine - Use (**kg** - *lbs*)	**TRANSPORT LOAD PER TIRE <= 10.9 T**											
STANDARD	**7950** *17530*	**8700** *19184*	**9400** *20727*	**10150** *22381*	**10900** *24035*							
Machine - Use (**kg** - *lbs*)	**TRANSPORT LOAD PER TIRE > 10.9 T**											
STANDARD						**11700** *25799*	**12150** *26791*	**12650** *27893*	**13100** *28886*			

TIRE LOAD IN KG/LB – TIRE PRESSURE IN BAR/PSI

COMMERCIAL DESCRIPTION	CAI *MSPN*	Max. dist./ hour **km** *mile*	TKPH [1] *TMPH*	e **mm** *inch*	D **mm** *inch*	R' **mm** *inch*	RC **mm** *inch*	Tread depth **mm** *32rd*	Dual Spacing **mm** *inch*	Cap. **liter** *gallon*	Measuring [2] [3] Recommended Rim	Other Approved [2] [3] Rims
XTRA LOAD GRIP A4 **18.00 R 33 Tubeless**	**515155** *09496*	**22** *13.7* *if load per tire <=10.9 t* **20** *12.4* *if load per tire >10.9 t*	**194** *133*	**497** *19.6*	**1872** *73.7*			**60** *75.6*	**598** *23.5*	**603** *159.3*	**13.00/2.5IN**	13.00/2.5
Bar *Psi*	**4** *58*	**4.5** *65*	**5** *73*	**5.5** *80*	**6** *87*	**6.5** *94*	**7** *102*	**7.5** *109*	**8** *116*			
Machine - Use (**kg** - *lbs*)	**TRANSPORT LOAD PER TIRE <= 10.9 T**											
STANDARD	**7950** *17530*	**8700** *19184*	**9400** *20727*	**10150** *22381*	**10900** *24035*							
Machine - Use (**kg** - *lbs*)	**TRANSPORT LOAD PER TIRE > 10.9 T**											
STANDARD						**11700** *25799*	**12150** *26791*	**12650** *27893*	**13100** *28886*			

COMMERCIAL DESCRIPTION	CAI *MSPN*	Max. dist./ hour **km** *mile*	TKPH [1] *TMPH*	e **mm** *inch*	D **mm** *inch*	R' **mm** *inch*	RC **mm** *inch*	Tread depth **mm** *32rd*	Dual Spacing **mm** *inch*	Cap. **liter** *gallon*	Measuring [2] [3] Recommended Rim	Other Approved [2] [3] Rims
XTRA LOAD PROTECT B E4 *** **18.00 R 33 Tubeless**	**769976** *21909*	**34** *21.1* *if load per tire <=10.9 t* **31** *19.3* *if load per tire >10.9 t*	**301** *206*	**498** *19.6*	**1888** *74.3*	**857** *33.7*	**5713** *224.9*	**63** *79.4*	**598** *23.5*	**603** *159.3*	**13.00/2.5IN**	13.00/2.5
Bar *Psi*	**4** *58*	**4.5** *65*	**5** *73*	**5.5** *80*	**6** *87*	**6.5** *94*	**7** *102*	**7.5** *109*	**8** *116*			
Machine - Use (**kg** - *lbs*)	**TRANSPORT LOAD PER TIRE <= 10.9 T**											
STANDARD	**7950** *17530*	**8700** *19184*	**9400** *20727*	**10150** *22381*	**10900** *24035*							
Machine - Use (**kg** - *lbs*)	**TRANSPORT LOAD PER TIRE > 10.9 T**											
STANDARD						**11700** *25799*	**12150** *26791*	**12650** *27893*	**13100** *28886*			

COMMERCIAL DESCRIPTION	CAI *MSPN*	Max. dist./ hour **km** *mile*	TKPH [1] *TMPH*	e **mm** *inch*	D **mm** *inch*	R' **mm** *inch*	RC **mm** *inch*	Tread depth **mm** *32rd*	Dual Spacing **mm** *inch*	Cap. **liter** *gallon*	Measuring [2] [3] Recommended Rim	Other Approved [2] [3] Rims
XTRA LOAD PROTECT A4 **18.00 R 33 Tubeless**	**646057** *89058*	**22** *13.7* *if load per tire <=10.9 t* **20** *12.4* *if load per tire >10.9 t*	**194** *133*	**498** *19.6*	**1888** *74.3*	**857** *33.7*	**5713** *224.9*	**63** *79.4*	**598** *23.5*	**603** *159.3*	**13.00/2.5IN**	13.00/2.5
Bar *Psi*	**4** *58*	**4.5** *65*	**5** *73*	**5.5** *80*	**6** *87*	**6.5** *94*	**7** *102*	**7.5** *109*	**8** *116*			
Machine - Use (**kg** - *lbs*)	**TRANSPORT LOAD PER TIRE <= 10.9 T**											
STANDARD	**7950** *17530*	**8700** *19184*	**9400** *20727*	**10150** *22381*	**10900** *24035*							
Machine - Use (**kg** - *lbs*)	**TRANSPORT LOAD PER TIRE > 10.9 T**											
STANDARD						**11700** *25799*	**12150** *26791*	**12650** *27893*	**13100** *28886*			

TIRE LOAD IN KG/LB – TIRE PRESSURE IN BAR/PSI

COMMERCIAL DESCRIPTION	CAI *MSPN*	Max. dist./ hour **km** *mile*	TKPH [1] *TMPH*	e **mm** *inch*	D **mm** *inch*	R' **mm** *inch*	RC **mm** *inch*	Tread depth **mm** *32rd*	Dual Spacing **mm** *inch*	Cap. **liter** *gallon*	Measuring [2] [3] Recommended Rim	Other Approved [2] [3] Rims
XV C E2 ** **18.00 R 33 Tubeless** [9]	**271325** *45385*	**50** *31.1*	**436** *299*	**496** *19.5*	**1820** *71.7*	**822** *32.4*	**5486** *216*	**26** *32.8*	**624** *24.6*	**640** *169.1*	**13.00/2.5IN**	13.00/2.5

Bar *Psi*	**4** *58*	**4.5** *65*	**5** *73*	**5.5** *80*	**6** *87*	**6.5** *94*	**7** *102*	**7.5** *109*
Machine - Use (**kg** - *lbs*)	**TRANSPORT**							
STANDARD	**7950** *17530*	**8700** *19184*	**9400** *20727*	**10150** *22381*	**10900** *24035*	**11270** *24850*	**11650** *25688*	**12000** *26460*

COMMERCIAL DESCRIPTION	CAI *MSPN*	Max. dist./ hour **km** *mile*	TKPH [1] *TMPH*	e **mm** *inch*	D **mm** *inch*	R' **mm** *inch*	RC **mm** *inch*	Tread depth **mm** *32rd*	Dual Spacing **mm** *inch*	Cap. **liter** *gallon*	Measuring [2] [3] Recommended Rim	Other Approved [2] [3] Rims
XTRA LOAD GRIP A4 E4 *** **21.00 R 33 Tubeless**	**843315** *31734*	**22** *13.7* *if load per tire <=14 t* **20** *12.4* *if load per tire >14 t*	**248** *170*	**565** *22.2*	**2003** *78.9*	**907** *35.7*	**6056** *238.4*	**66** *83.1*	**701** *27.6*	**857** *226.4*	**15.00/3.0**	

Bar *Psi*	**4** *58*	**4.5** *65*	**5** *73*	**5.5** *80*	**6** *87*	**6.5** *94*	**7** *102*	**7.25** *105*	**7.5** *109*	**8** *116*
Machine - Use (**kg** - *lbs*)	**TRANSPORT LOAD PER TIRE <= 14 T**									
STANDARD	**9315** *20540*	**10250** *22601*	**11185** *24663*	**12125** *26736*	**13065** *28808*	**14000** *30870*				
Machine - Use (**kg** - *lbs*)	**TRANSPORT LOAD PER TIRE > 14 T**									
ALL AXLES							**15000** *33075*	**15500** *34178*	**15867** *34987*	**16600** *36603*

COMMERCIAL DESCRIPTION	CAI *MSPN*	Max. dist./ hour **km** *mile*	TKPH [1] *TMPH*	e **mm** *inch*	D **mm** *inch*	R' **mm** *inch*	RC **mm** *inch*	Tread depth **mm** *32rd*	Dual Spacing **mm** *inch*	Cap. **liter** *gallon*	Measuring [2] [3] Recommended Rim	Other Approved [2] [3] Rims
XTRA LOAD GRIP B E4T *** **21.00 R 33 Tubeless**	**523174** *03975*	**34** *21.1* *if load per tire <=14 t* **31** *19.3* *if load per tire >14 t*	**384** *263*	**565** *22.2*	**2003** *78.9*	**906** *35.7*	**6054** *238.3*	**66** *83.1*	**701** *27.6*	**857** *226.4*	**15.00/3.0**	

Bar *Psi*	**4** *58*	**4.5** *65*	**5** *73*	**5.5** *80*	**6** *87*	**6.5** *94*	**7** *102*	**7.25** *105*	**7.5** *109*	**8** *116*
Machine - Use (**kg** - *lbs*)	**TRANSPORT LOAD PER TIRE <= 14 T**									
STANDARD	**9315** *20540*	**10250** *22601*	**11185** *24663*	**12125** *26736*	**13065** *28808*	**14000** *30870*				
Machine - Use (**kg** - *lbs*)	**TRANSPORT LOAD PER TIRE > 14 T**									
ALL AXLES							**15000** *33075*	**15500** *34178*	**15867** *34987*	**16600** *36603*

TIRE LOAD IN KG/LB – TIRE PRESSURE IN BAR/PSI

COMMERCIAL DESCRIPTION	CAI *MSPN*	Max. dist./ hour **km** *mile*	TKPH [1] *TMPH*	e **mm** *inch*	D **mm** *inch*	R' **mm** *inch*	RC **mm** *inch*	Tread depth **mm** *32rd*	Dual Spacing **mm** *inch*	Cap. **liter** *gallon*	Measuring [2] [3] Recommended Rim	Other Approved [2] [3] Rims
XTRA LOAD PROTECT A4 E4T *** **21.00 R 33 Tubeless**	**167639** *05749*	**22** *13.7* *if load per tire <=14 t* **20** *12.4* *if load per tire >14 t*	**248** *170*	**565** *22.2*	**1979** *77.9*	**895** *35.2*	**5981** *235.5*	**54** *68*	**701** *27.6*	**859** *226.9*	**15.00/3.0**	
Bar *Psi*	**4** *58*	**4.5** *65*	**5** *73*	**5.5** *80*	**6** *87*	**6.5** *94*	**7** *102*	**7.25** *105*	**7.5** *109*	**8** *116*		
Machine - Use (**kg** - *lbs*)	**TRANSPORT LOAD PER TIRE <= 14 T**											
STANDARD	**9315** *20540*	**10250** *22601*	**11185** *24663*	**12125** *26736*	**13065** *28808*	**14000** *30870*						
Machine - Use (**kg** - *lbs*)	**TRANSPORT LOAD PER TIRE > 14 T**											
ALL AXLES							**15000** *33075*	**15500** *34178*	**15867** *34987*	**16600** *36603*		

COMMERCIAL DESCRIPTION	CAI *MSPN*	Max. dist./ hour **km** *mile*	TKPH [1] *TMPH*	e **mm** *inch*	D **mm** *inch*	R' **mm** *inch*	RC **mm** *inch*	Tread depth **mm** *32rd*	Dual Spacing **mm** *inch*	Cap. **liter** *gallon*	Measuring [2] [3] Recommended Rim	Other Approved [2] [3] Rims
XTRA LOAD PROTECT B E4T *** **21.00 R 33 Tubeless**	**495016** *35283*	**34** *21.1* *if load per tire <=14 t* **31** *19.3* *if load per tire >14 t*	**384** *263*	**565** *22.2*	**1979** *77.9*	**895** *35.2*	**5981** *235.5*	**54** *68*	**701** *27.6*	**859** *226.9*	**15.00/3.0**	
Bar *Psi*	**4** *58*	**4.5** *65*	**5** *73*	**5.5** *80*	**6** *87*	**6.5** *94*	**7** *102*	**7.25** *105*	**7.5** *109*	**8** *116*		
Machine - Use (**kg** - *lbs*)	**TRANSPORT LOAD PER TIRE <= 14 T**											
STANDARD	**9315** *20540*	**10250** *22601*	**11185** *24663*	**12125** *26736*	**13065** *28808*	**14000** *30870*						
Machine - Use (**kg** - *lbs*)	**TRANSPORT LOAD PER TIRE > 14 T**											
ALL AXLES							**15000** *33075*	**15500** *34178*	**15867** *34987*	**16600** *36603*		

COMMERCIAL DESCRIPTION	CAI *MSPN*	Max. dist./ hour **km** *mile*	TKPH [1] *TMPH*	e **mm** *inch*	D **mm** *inch*	R' **mm** *inch*	RC **mm** *inch*	Tread depth **mm** *32rd*	Dual Spacing **mm** *inch*	Cap. **liter** *gallon*	Measuring [2] [3] Recommended Rim	Other Approved [2] [3] Rims
X-TRACTION E4T ** **21.00 R 33 Tubeless**	**067981** *17274*	**25** *15.5*	**280** *192*	**572** *22.5*	**2007** *79*	**907** *35.7*	**6064** *238.7*	**71** *89.4*	**697** *27.4*	**851** *224.8*	**15.00/3.0**	
Bar *Psi*	**4** *58*	**4.5** *65*	**5** *73*	**5.5** *80*	**6** *87*	**6.5** *94*	**7** *102*					
Machine - Use (**kg** - *lbs*)	**TRANSPORT**											
STANDARD	**9315** *20540*	**10250** *22601*	**11185** *24663*	**12125** *26736*	**13065** *28808*	**14000** *30870*	**14470** *31906*					

COMMERCIAL DESCRIPTION	CAI *MSPN*	Max. dist./ hour **km** *mile*	TKPH [1] *TMPH*	e **mm** *inch*	D **mm** *inch*	R' **mm** *inch*	RC **mm** *inch*	Tread depth **mm** *32rd*	Dual Spacing **mm** *inch*	Cap. **liter** *gallon*	Measuring [2] [3] Recommended Rim	Other Approved [2] [3] Rims
X-TRACTION E4T ** **21.00 R 33 Tubeless**	**294197**	**18** *11.2*	**202** *138*	**572** *22.5*	**2007** *79*	**907** *35.7*	**6064** *238.7*	**71** *89.4*	**697** *27.4*	**851** *224.8*	**15.00/3.0**	
Bar *Psi*	**4** *58*	**4.5** *65*	**5** *73*	**5.5** *80*	**6** *87*	**6.5** *94*	**7** *102*					
Machine - Use (**kg** - *lbs*)	**TRANSPORT**											
STANDARD	**9315** *20540*	**10250** *22601*	**11185** *24663*	**12125** *26736*	**13065** *28808*	**14000** *30870*	**14470** *31906*					

TIRE LOAD IN KG/LB – TIRE PRESSURE IN BAR/PSI

COMMERCIAL DESCRIPTION	CAI *MSPN*	Max. dist./ hour **km** *mile*	**TKPH** [1] *TMPH*	e **mm** *inch*	D **mm** *inch*	R' **mm** *inch*	RC **mm** *inch*	Tread depth **mm** *32rd*	Dual Spacing **mm** *inch*	Cap. **liter** *gallon*	Measuring [2] [3] Recommended Rim	Other Approved [2] [3] Rims
X-HAUL S E4P ** **21.00 R 33 Tubeless**	**612785** *08931*	**25** *15.5*	**280** *192*	**550** *21.7*	**1966** *77.4*	**895** *35.2*	**5955** *234.4*	**53** *66.8*	**697** *27.4*	**820** *216.6*	**15.00/3.0**	
Bar *Psi*	**4** *58*	**4.5** *65*	**5** *73*	**5.5** *80*	**6** *87*	**6.5** *94*	**7** *102*					
Machine - Use (**kg** - *lbs*)	**TRANSPORT**											
STANDARD	**9315** *20540*	**10250** *22601*	**11185** *24663*	**12125** *26736*	**13065** *28808*	**14000** *30870*	**14470** *31906*					

COMMERCIAL DESCRIPTION	CAI *MSPN*	Max. dist./ hour **km** *mile*	**TKPH** [1] *TMPH*	e **mm** *inch*	D **mm** *inch*	R' **mm** *inch*	RC **mm** *inch*	Tread depth **mm** *32rd*	Dual Spacing **mm** *inch*	Cap. **liter** *gallon*	Measuring [2] [3] Recommended Rim	Other Approved [2] [3] Rims
XLD D2 L5 ** **35/65 R 33 Tubeless**	**592188** *29247*	**10** *6.2*		**926** *36.5*	**2060** *81.1*	**902** *35.5*	**6150** *242.1*	**97** *122.2*		**1457** *384.9*	**28.00/3.5**	
Bar *Psi*	**2** *29*	**2.5** *36*	**3** *44*	**3.5** *51*	**4** *58*	**4.5** *65*	**5** *73*	**5.5** *80*	**6** *87*	**6.5** *94*		
Machine - Use (**kg** - *lbs*)	**LOADER**											
FRONT LADEN			**16100** *35501*	**17700** *39029*	**19000** *41895*	**21200** *46746*	**23000** *50715*	**24300** *53582*	**25750** *56779*	**28000** *61740*		
REAR UNLADEN			**12900** *28445*	**14200** *31311*	**15200** *33516*	**16950** *37375*	**18400** *40572*	**19450** *42887*	**20600** *45423*	**22400** *49392*		
Machine - Use (**kg** - *lbs*)	**UNDERGROUND TRANSPORT MACHINE**											
ALL AXLES			**13600** *29988*	**15500** *34178*	**17000** *37485*	**18500** *40793*	**20000** *44100*	**21800** *48069*	**23000** *50715*	**24300** *53582*		

COMMERCIAL DESCRIPTION	CAI *MSPN*	Max. dist./ hour **km** *mile*	**TKPH** [1] *TMPH*	e **mm** *inch*	D **mm** *inch*	R' **mm** *inch*	RC **mm** *inch*	Tread depth **mm** *32rd*	Dual Spacing **mm** *inch*	Cap. **liter** *gallon*	Measuring [2] [3] Recommended Rim	Other Approved [2] [3] Rims
XMINE D2 L5 ** **35/65 R 33 Tubeless**	**944666** *67187*	**6** *3.7*		**921** *36.3*	**2051** *80.7*	**916** *36.1*	**6169** *242.9*	**93** *117.2*		**1338** *353.5*	**28.00/3.5**	
Bar *Psi*	**2** *29*	**2.5** *36*	**3** *44*	**3.5** *51*	**4** *58*	**4.5** *65*	**5** *73*	**5.5** *80*	**6** *87*	**6.5** *94*		
Machine - Use (**kg** - *lbs*)	**LOADER**											
FRONT LADEN			**16100** *35501*	**17700** *39029*	**19000** *41895*	**21200** *46746*	**23000** *50715*	**24300** *53582*	**25750** *56779*	**28000** *61740*		
REAR UNLADEN			**12900** *28445*	**14200** *31311*	**15200** *33516*	**16950** *37375*	**18400** *40572*	**19450** *42887*	**20600** *45423*	**22400** *49392*		
Machine - Use (**kg** - *lbs*)	**UNDERGROUND TRANSPORT MACHINE**											
ALL AXLES			**13600** *29988*	**15500** *34178*	**17000** *37485*	**18500** *40793*	**20000** *44100*	**21800** *48069*	**23000** *50715*	**24300** *53582*		

COMMERCIAL DESCRIPTION	CAI *MSPN*	Max. dist./ hour **km** *mile*	**TKPH** [1] *TMPH*	e **mm** *inch*	D **mm** *inch*	R' **mm** *inch*	RC **mm** *inch*	Tread depth **mm** *32rd*	Dual Spacing **mm** *inch*	Cap. **liter** *gallon*	Measuring [2] [3] Recommended Rim	Other Approved [2] [3] Rims
XLD D1 A L4R ** **35/65 R 33 Tubeless**	**143231** *33617*	**14** *8.7*		**923** *36.3*	**2056** *80.9*	**899** *35.4*	**6135** *241.5*	**60** *75.6*		**1550** *409.5*	**28.00/3.5**	
Bar *Psi*	**2** *29*	**2.5** *36*	**3** *44*	**3.5** *51*	**4** *58*	**4.5** *65*	**5** *73*	**5.5** *80*	**6** *87*	**6.5** *94*		
Machine - Use (**kg** - *lbs*)	**LOADER**											
FRONT LADEN			**16100** *35501*	**17700** *39029*	**19000** *41895*	**21200** *46746*	**23000** *50715*	**24300** *53582*	**25750** *56779*	**28000** *61740*		
REAR UNLADEN			**12900** *28445*	**14200** *31311*	**15200** *33516*	**16950** *37375*	**18400** *40572*	**19450** *42887*	**20600** *45423*	**22400** *49392*		
Machine - Use (**kg** - *lbs*)	**UNDERGROUND TRANSPORT MACHINE**											
ALL AXLES			**13600** *29988*	**15500** *34178*	**17000** *37485*	**18500** *40793*	**20000** *44100*	**21800** *48069*	**23000** *50715*	**24300** *53582*		

TIRE LOAD IN KG/LB – TIRE PRESSURE IN BAR/PSI

COMMERCIAL DESCRIPTION	CAI *MSPN*	Max. dist./ hour **km** *mile*	**TKPH** [1] *TMPH*	e **mm** *inch*	D **mm** *inch*	R' **mm** *inch*	RC **mm** *inch*	Tread depth **mm** *32rd*	Dual Spacing **mm** *inch*	Cap. **liter** *gallon*	Measuring [2] [3] Recommended Rim	Other Approved [2] [3] Rims
X MINE D2 EXTRA LOAD L5 TL* 35/65 R 33 Tubeless**	**038242** *61090*	**6** *3.7*		**921** *36.3*	**2077** *81.8*	**923** *36.3*	**6236** *245.5*	**93** *117.2*		**1410** *372.5*	**28.00/3.5**	
Bar *Psi*	**3** *44*	**4** *58*	**4.5** *65*	**5** *73*	**5.5** *80*	**6** *87*	**6.5** *94*	**7** *102*	**7.5** *109*	**8** *116*		
Machine - Use (**kg** - *lbs*)	**LOADER**											
FRONT LADEN	**16100** *35501*	**19000** *41895*	**21200** *46746*	**23000** *50715*	**24300** *53582*	**25750** *56779*	**28000** *61740*	**30000** *66150*	**31500** *69458*	**32500** *71663*		
REAR UNLADEN	**12900** *28445*	**15200** *33516*	**16950** *37375*	**18400** *40572*	**19450** *42887*	**20600** *45423*	**22400** *49392*	**24000** *52920*	**25200** *55566*	**26000** *57330*		

COMMERCIAL DESCRIPTION	CAI *MSPN*	Max. dist./ hour **km** *mile*	**TKPH** [1] *TMPH*	e **mm** *inch*	D **mm** *inch*	R' **mm** *inch*	RC **mm** *inch*	Tread depth **mm** *32rd*	Dual Spacing **mm** *inch*	Cap. **liter** *gallon*	Measuring [2] [3] Recommended Rim	Other Approved [2] [3] Rims
XSM D2+ L5S ** 35/65 R 33 Tubeless	**980846** *39998*	**4** *2.5*		**921** *36.3*	**2050** *80.7*	**916** *36.1*	**6166** *242.8*	**97** *122.2*		**1350** *356.7*	**28.00/3.5**	
Bar *Psi*	**2** *29*	**2.5** *36*	**3** *44*	**3.5** *51*	**4** *58*	**4.5** *65*	**5** *73*	**5.5** *80*	**6** *87*	**6.5** *94*		
Machine - Use (**kg** - *lbs*)	**LOADER**											
FRONT LADEN			**16100** *35501*	**17700** *39029*	**19000** *41895*	**21200** *46746*	**23000** *50715*	**24300** *53582*	**25750** *56779*	**28000** *61740*		
REAR UNLADEN			**12900** *28445*	**14200** *31311*	**15200** *33516*	**16950** *37375*	**18400** *40572*	**19450** *42887*	**20600** *45423*	**22400** *49392*		

COMMERCIAL DESCRIPTION	CAI *MSPN*	Max. dist./ hour **km** *mile*	**TKPH** [1] *TMPH*	e **mm** *inch*	D **mm** *inch*	R' **mm** *inch*	RC **mm** *inch*	Tread depth **mm** *32rd*	Dual Spacing **mm** *inch*	Cap. **liter** *gallon*	Measuring [2] [3] Recommended Rim	Other Approved [2] [3] Rims
XSM DN+ L3S * 35/65 R 33 Tubeless** [9]	**432610** *07865*	**10** *6.2*		**920** *36.2*	**2022** *79.6*	**897** *35.3*	**6066** *238.8*	**49** *61.7*		**1547** *408.7*	**28.00/3.5**	
Bar *Psi*	**3** *44*	**4** *58*	**4.5** *65*	**5** *73*	**5.5** *80*	**6** *87*	**6.5** *94*	**7** *102*	**7.5** *109*	**8** *116*		
Machine - Use (**kg** - *lbs*)	**LOADER**											
FRONT LADEN	**16100** *35501*	**19000** *41895*	**21200** *46746*	**23000** *50715*	**24300** *53582*	**25750** *56779*	**28000** *61740*	**30000** *66150*	**31500** *6946*	**32500** *71663*		
REAR UNLADEN	**12900** *28445*	**15200** *33516*	**16950** *37375*	**18400** *40572*	**19450** *42887*	**20600** *45423*	**22400** *49392*	**24000** *52920*	**25200** *55566*	**26000** *57330*		

COMMERCIAL DESCRIPTION	CAI *MSPN*	Max. dist./ hour **km** *mile*	**TKPH** [1] *TMPH*	e **mm** *inch*	D **mm** *inch*	R' **mm** *inch*	RC **mm** *inch*	Tread depth **mm** *32rd*	Dual Spacing **mm** *inch*	Cap. **liter** *gallon*	Measuring [2] [3] Recommended Rim	Other Approved [2] [3] Rims
XSM DN L3S 35/65 R 33 Tubeless	**123052** *92439*	**10** *6.2*		**918** *36.1*	**2012** *79.2*	**899** *35.4*	**6052** *238.3*	**44** *55.4*		**1550** *409.5*	**28.00/3.5**	
Bar *Psi*	**2** *29*	**2.5** *36*	**3** *44*	**3.5** *51*	**4** *58*	**4.5** *65*	**5** *73*	**5.5** *80*	**6** *87*			
Machine - Use (**kg** - *lbs*)	**LOADERS**											
FRONT LADEN	**13750** *30319*	**14850** *32744*	**16100** *35501*	**17700** *39029*	**19000** *41895*	**21200** *46746*	**23000** *50715*	**24150** *53251*	**25300** *55787*			
REAR UNLADEN	**10990** *24233*	**11870** *26173*	**12870** *28378*	**14170** *31245*	**15200** *33516*	**16950** *37375*	**18400** *40572*	**19300** *42557*	**20250** *44651*			
Machine - Use (**kg** - *lbs*)	**UNDERGROUND TRANSPORT MACHINE**											
ALL AXLES			**13600** *29988*	**15500** *34178*	**17000** *37485*	**18500** *40793*	**20000** *44100*	**21800** *48069*	**23000** *50715*			

TIRE LOAD IN KG/LB – TIRE PRESSURE IN BAR/PSI

COMMERCIAL DESCRIPTION	CAI *MSPN*	Max. dist./ hour **km** *mile*	TKPH [1] *TMPH*	e **mm** *inch*	D **mm** *inch*	R' **mm** *inch*	RC **mm** *inch*	Tread depth **mm** *32rd*	Dual Spacing **mm** *inch*	Cap. **liter** *gallon*	Measuring [2] [3] Recommended Rim	Other Approved [2] [3] Rims
XTRA POWER L5 *** **35/65 R 33 Tubeless**	**169990** *51910*	**10** *6.2* *if load per tire <=28 t* **8** *5* *if load per tire >28 t*		**930** *36.6*	**2058** *81*	**905** *36*	**6154** *242*	**95** *119.7*		**1403** *370.7*	**28.00/3.5**	

Bar *Psi*	**3** *44*	**4** *58*	**4.5** *65*	**5** *73*	**5.5** *80*	**6** *87*	**6.5** *94*	**7** *102*	**7.5** *109*	**8** *116*
Machine - Use (**kg** - *lbs*)	**LOADER LOAD PER TIRE <= 28 T**									
FRONT LADEN	**16100** *35501*	**19000** *41895*	**21200** *46746*	**23000** *50715*	**24300** *53582*	**25750** *56779*	**28000** *61740*			
REAR UNLADEN	**12900** *28445*	**15200** *33516*	**16950** *37375*	**18400** *40572*	**19450** *42887*	**20600** *45423*	**22400** *49392*			
Machine - Use (**kg** - *lbs*)	**LOADER LOAD PER TIRE > 28 T**									
FRONT LADEN								**30000** *66150*	**31500** *69458*	**32500** *71663*
REAR UNLADEN								**24000** *52920*	**25200** *55566*	**26000** *57330*

COMMERCIAL DESCRIPTION	CAI *MSPN*	Max. dist./ hour **km** *mile*	TKPH [1] *TMPH*	e **mm** *inch*	D **mm** *inch*	R' **mm** *inch*	RC **mm** *inch*	Tread depth **mm** *32rd*	Dual Spacing **mm** *inch*	Cap. **liter** *gallon*	Measuring [2] [3] Recommended Rim	Other Approved [2] [3] Rims
X UM HAUL SH-4 ** 225A8** **35/65 R 33 Tubeless [9]**	**645051** *78667*	**14** *8.7*	**360** *247*	**922** *36.3*	**2081** *81.9*			**60** *75.6*		**1505** *397.6*	**28.00/3.5**	

Bar *Psi*	**4.5** *65*	**5** *73*	**5.5** *80*	**6** *87*	**6.5** *94*	**7** *102*
Machine - Use (**kg** - *lbs*)	**UNDERGROUND TRANSPORT MACHINE**					
ALL AXLES	**23000** *50715*	**24300** *53582*	**25750** *56779*	**27250** *60086*	**29000** *63945*	**31500** *69458*

COMMERCIAL DESCRIPTION	CAI *MSPN*	Max. dist./ hour **km** *mile*	TKPH [1] *TMPH*	e **mm** *inch*	D **mm** *inch*	R' **mm** *inch*	RC **mm** *inch*	Tread depth **mm** *32rd*	Dual Spacing **mm** *inch*	Cap. **liter** *gallon*	Measuring [2] [3] Recommended Rim	Other Approved [2] [3] Rims
XTXL E4 ** L4 *** 229A2** **35/65 R 33 Tubeless**	**845075** *46729*	**14** *8.7* *if load per tire <=28 t* **10** *6.2* *if load per tire >28 t*	**250** *171*	**907** *35.7*	**2026** *79.8*	**887** *34.9*	**6048** *238.1*	**60** *75.6*		**1474** *389.4*	**28.00/3.5**	

Bar *Psi*	**3** *44*	**4** *58*	**4.5** *65*	**5** *73*	**5.5** *80*	**6** *87*	**6.5** *94*	**7** *102*	**7.5** *109*	**8** *116*
Machine - Use (**kg** - *lbs*)	**LOADER LOAD PER TIRE <= 28 T**									
FRONT LADEN	**16100** *35501*	**19000** *41895*	**21200** *46746*	**23000** *50715*	**24300** *53582*	**25750** *56779*	**28000** *61740*			
REAR UNLADEN	**12900** *28445*	**15200** *33516*	**16950** *37375*	**18400** *40572*	**19450** *42887*	**20600** *45423*	**22400** *49392*			
Machine - Use (**kg** - *lbs*)	**LOADER LOAD PER TIRE > 28 T**									
FRONT LADEN								**30000** *66150*	**31500** *69458*	**32500** *71663*
REAR UNLADEN								**24000** *52920*	**25200** *55566*	**26000** *57330*
Machine - Use (**kg** - *lbs*)	**UNDERGROUND TRANSPORT MACHINE**									
ALL AXLES				**20000** *44100*	**21200** *46746*	**23000** *50715*	**24300** *53582*	**25750** *56779*	**27250** *60086*	**29000** *63945*

BLOCK HANDLING (SEE DETAILS IN THE SECTION: HELP WITH THE USE OF EARTHMOVER TIRES)

TIRE LOAD IN KG/LB – TIRE PRESSURE IN BAR/PSI

COMMERCIAL DESCRIPTION	CAI *MSPN*	Max. dist./ hour **km** *mile*	TKPH [1] *TMPH*	e **mm** *inch*	D **mm** *inch*	R' **mm** *inch*	RC **mm** *inch*	Tread depth **mm** *32rd*	Dual Spacing **mm** *inch*	Cap. **liter** *gallon*	Measuring [2] [3] Recommended Rim	Other Approved [2] [3] Rims
XTXL E4 **** **35/65 R 33 Tubeless**	**970355** *34351*		**250** *171*	**907** *35.7*	**2026** *79.8*	**893** *35.2*	**6063** *238.7*	**60** *75.6*		**1546** *408.5*	**28.00/3.5**	
Bar *Psi*	**3** *44*	**4** *58*	**4.5** *65*	**5** *73*	**5.5** *80*	**6** *87*	**6.5** *94*	**7** *102*	**7.5** *109*	**8** *116*		
Machine - Use (**kg** - *lbs*)	**UNDERGROUND TRANSPORT MACHINE**											
ALL AXLES					**20000** *44100*	**21200** *46746*	**23000** *50715*	**24300** *53582*	**25750** *56779*	**27250** *60086*	**29000** *63945*	

COMMERCIAL DESCRIPTION	CAI *MSPN*	Max. dist./ hour **km** *mile*	TKPH [1] *TMPH*	e **mm** *inch*	D **mm** *inch*	R' **mm** *inch*	RC **mm** *inch*	Tread depth **mm** *32rd*	Dual Spacing **mm** *inch*	Cap. **liter** *gallon*	Measuring [2] [3] Recommended Rim	Other Approved [2] [3] Rims
XTXL S E4 **** **35/65 R 33 Tubeless** [9]	**771025** *91242*		**320** *219*	**907** *35.7*	**2026** *79.8*	**893** *35.2*	**6063** *238.7*	**60** *75.6*		**1546** *408.5*	**28.00/3.5**	
Bar *Psi*	**3** *44*	**4** *58*	**4.5** *65*	**5** *73*	**5.5** *80*	**6** *87*	**6.5** *94*	**7** *102*	**7.5** *109*	**8** *116*		
Machine - Use (**kg** - *lbs*)	**UNDERGROUND TRANSPORT MACHINE**											
ALL AXLES					**20000** *44100*	**21200** *46746*	**23000** *50715*	**24300** *53582*	**25750** *56779*	**27250** *60086*	**29000** *63945*	

35"

COMMERCIAL DESCRIPTION	CAI *MSPN*	Max. dist./ hour **km** *mile*	TKPH [1] *TMPH*	e **mm** *inch*	D **mm** *inch*	R' **mm** *inch*	RC **mm** *inch*	Tread depth **mm** *32rd*	Dual Spacing **mm** *inch*	Cap. **liter** *gallon*	Measuring [2] [3] Recommended Rim	Other Approved [2] [3] Rims
XDT B E4T ** **21.00 R 35 Tubeless**	**123881** *40692*	**30** *18.6*	**348** *238*	**576** *22.7*	**2062** *81.2*	**937** *36.9*	**6242** *245.7*	**61** *76.9*		**900** *237.8*	**15.00/3.0IN**	15.00/3.0 17.00/3.0
Bar *Psi*	**4.5** *65*	**5** *73*	**5.5** *80*	**6** *87*	**6.5** *94*	**7** *102*						
Machine - Use (**kg** - *lbs*)	**TRANSPORT**											
STANDARD	**11450** *25247*	**12450** *27452*	**13500** *29768*	**14500** *31973*	**15000** *33075*	**15500** *34178*						

COMMERCIAL DESCRIPTION	CAI *MSPN*	Max. dist./ hour **km** *mile*	TKPH [1] *TMPH*	e **mm** *inch*	D **mm** *inch*	R' **mm** *inch*	RC **mm** *inch*	Tread depth **mm** *32rd*	Dual Spacing **mm** *inch*	Cap. **liter** *gallon*	Measuring [2] [3] Recommended Rim	Other Approved [2] [3] Rims
XDT A4 E4T ** **21.00 R 35 Tubeless**	**123921** *94773*	**18** *11.2*	**209** *143*	**576** *22.7*	**2062** *81.2*	**937** *36.9*	**6242** *245.7*	**61** *76.9*		**900** *237.8*	**15.00/3.0IN**	15.00/3.0 17.00/3.0
Bar *Psi*	**4.5** *65*	**5** *73*	**5.5** *80*	**6** *87*	**6.5** *94*	**7** *102*						
Machine - Use (**kg** - *lbs*)	**TRANSPORT**											
STANDARD	**11450** *25247*	**12450** *27452*	**13500** *29768*	**14500** *31973*	**15000** *33075*	**15500** *34178*						

COMMERCIAL DESCRIPTION	CAI *MSPN*	Max. dist./ hour **km** *mile*	TKPH [1] *TMPH*	e **mm** *inch*	D **mm** *inch*	R' **mm** *inch*	RC **mm** *inch*	Tread depth **mm** *32rd*	Dual Spacing **mm** *inch*	Cap. **liter** *gallon*	Measuring [2] [3] Recommended Rim	Other Approved [2] [3] Rims
XDT B E4T ** **24.00 R 35 Tubeless**	**123931** *88632*	**30** *18.6*	**444** *304*	**652** *25.7*	**2162** *85.1*	**978** *38.5*	**6533** *257.2*	**68** *85.7*	**825** *32.5*	**1150** *303.8*	**17.00/3.5**	15.00/3.5
Bar *Psi*	**4.5** *65*	**5** *73*	**5.5** *80*	**6** *87*	**6.5** *94*	**7** *102*	**7.5** *109*	**8** *116*				
Machine - Use (**kg** - *lbs*)	**TRANSPORT**											
STANDARD	**13950** *30760*	**15050** *33185*	**16300** *35942*	**17350** *38257*	**18500** *40793*	**19050** *42005*	**19625** *43273*	**20200** *44541*				

TIRE LOAD IN KG/LB – TIRE PRESSURE IN BAR/PSI

COMMERCIAL DESCRIPTION	CAI *MSPN*	Max. dist./ hour **km** *mile*	TKPH [1] *TMPH*	e **mm** *inch*	D **mm** *inch*	R' **mm** *inch*	RC **mm** *inch*	Tread depth **mm** *32rd*	Dual Spacing **mm** *inch*	Cap. **liter** *gallon*	Measuring [2] [3] Recommended Rim	Other Approved [2] [3] Rims
X-HAUL E4P ** **24.00 R 35 Tubeless**	**087693** *89581*	**24** *14.9*	**355** *243*	**645** *25.4*	**2155** *84.8*	**995** *39.2*	**6562** *258.3*	**60** *75.6*	**825** *32.5*	**1150** *303.8*	**17.00/3.5**	15.00/3.5
Bar *Psi*	**4.5** *65*	**5** *73*	**5.5** *80*	**6** *87*	**6.5** *94*	**7** *102*	**7.5** *109*	**8** *116*				
Machine - Use (**kg** - *lbs*)	**TRANSPORT**											
STANDARD	**13950** *30760*	**15050** *33185*	**16300** *35942*	**17350** *38257*	**18500** *40793*	**19050** *42005*	**19625** *43273*	**20200** *44541*				

COMMERCIAL DESCRIPTION	CAI *MSPN*	Max. dist./ hour **km** *mile*	TKPH [1] *TMPH*	e **mm** *inch*	D **mm** *inch*	R' **mm** *inch*	RC **mm** *inch*	Tread depth **mm** *32rd*	Dual Spacing **mm** *inch*	Cap. **liter** *gallon*	Measuring [2] [3] Recommended Rim	Other Approved [2] [3] Rims
XTRA LOAD GRIP B E4 **24.00 R 35 Tubeless *****	**302244** *86007*	**34** *21.1* *if load per tire <=18.5 t* **31** *19.3* *if load per tire >18.5 t*	**503** *345*	**666** *26.2*	**2163** *85.2*	**976** *38.4*	**6531** *257.1*	**73** *92*	**795** *31.3*	**1169** *308.8*	**17.00/3.5**	15.00/3.5
Bar *Psi*	**4.5** *65*	**5** *73*	**5.5** *80*	**6** *87*	**6.5** *94*	**7** *102*	**7.25** *105*	**7.5** *109*	**7.75** *112*	**8** *116*		
Machine - Use (**kg** - *lbs*)	**TRANSPORT LOAD PER TIRE <= 18.5 T**											
STANDARD	**13950** *30760*	**15050** *33185*	**16300** *35942*	**17350** *38257*	**18500** *40793*							
Machine - Use (**kg** - *lbs*)	**TRANSPORT LOAD PER TIRE > 18.5 T**											
STANDARD						**19500** *42998*	**20000** *44100*	**20500** *45203*	**21000** *46305*	**21500** *47408*		

COMMERCIAL DESCRIPTION	CAI *MSPN*	Max. dist./ hour **km** *mile*	TKPH [1] *TMPH*	e **mm** *inch*	D **mm** *inch*	R' **mm** *inch*	RC **mm** *inch*	Tread depth **mm** *32rd*	Dual Spacing **mm** *inch*	Cap. **liter** *gallon*	Measuring [2] [3] Recommended Rim	Other Approved [2] [3] Rims
XTRA LOAD GRIP A4 E4 **24.00 R 35 Tubeless *****	**559900** *77075*	**22** *13.7* *if load per tire <=18.5 t* **20** *12.4* *if load per tire >18.5 t*	**320** *219*	**666** *26.2*	**2163** *85.2*	**976** *38.4*	**6531** *257.1*	**73** *92*	**795** *31.3*	**1169** *308.8*	**17.00/3.5**	15.00/3.5
Bar *Psi*	**4.5** *65*	**5** *73*	**5.5** *80*	**6** *87*	**6.5** *94*	**7** *102*	**7.25** *105*	**7.5** *109*	**7.75** *112*	**8** *116*		
Machine - Use (**kg** - *lbs*)	**TRANSPORT LOAD PER TIRE <= 18.5 T**											
STANDARD	**13950** *30760*	**15050** *33185*	**16300** *35942*	**17350** *38257*	**18500** *40793*							
Machine - Use (**kg** - *lbs*)	**TRANSPORT LOAD PER TIRE > 18.5 T**											
STANDARD						**19500** *42998*	**20000** *44100*	**20500** *45203*	**21000** *46305*	**21500** *47408*		

TIRE LOAD IN KG/LB – TIRE PRESSURE IN BAR/PSI

COMMERCIAL DESCRIPTION	CAI *MSPN*	Max. dist./ hour **km** *mile*	TKPH [1] *TMPH*	e **mm** *inch*	D **mm** *inch*	R' **mm** *inch*	RC **mm** *inch*	Tread depth **mm** *32rd*	Dual Spacing **mm** *inch*	Cap. **liter** *gallon*	Measuring [2] [3] Recommended Rim	Other Approved [2] [3] Rims
XTRA LOAD PROTECT B E4 24.00 R 35 Tubeless ***	**488798** *67386*	**34** *21.1 if load per tire <=18.5 t* **31** *19.3 if load per tire >18.5 t*	**503** *345*	**670** *26.4*	**2162** *85.1*	**978** *38.5*	**6533** *257.2*	**70** *88.2*	**795** *31.3*	**1169** *308.8*	**17.00/3.5**	15.00/3.5
Bar *Psi*	**4.5** *65*	**5** *73*	**5.5** *80*	**6** *87*	**6.5** *94*	**7** *102*	**7.25** *105*	**7.5** *109*	**7.75** *112*	**8** *116*		
Machine - Use (**kg** - *lbs*)	**TRANSPORT LOAD PER TIRE <= 18.5 T**											
STANDARD	**13950** *30760*	**15050** *33185*	**16300** *35942*	**17350** *38257*	**18500** *40793*							
Machine - Use (**kg** - *lbs*)	**TRANSPORT LOAD PER TIRE > 18.5 T**											
STANDARD						**19500** *42998*	**20000** *44100*	**20500** *45203*	**21000** *46305*	**21500** *47408*		

COMMERCIAL DESCRIPTION	CAI *MSPN*	Max. dist./ hour **km** *mile*	TKPH [1] *TMPH*	e **mm** *inch*	D **mm** *inch*	R' **mm** *inch*	RC **mm** *inch*	Tread depth **mm** *32rd*	Dual Spacing **mm** *inch*	Cap. **liter** *gallon*	Measuring [2] [3] Recommended Rim	Other Approved [2] [3] Rims
XTRA LOAD PROTECT A4 E4 24.00 R 35 Tubeless ***	**388190** *05723*	**22** *13.7 if load per tire <=18.5 t* **20** *12.4 if load per tire >18.5 t*	**320** *219*	**670** *26.4*	**2162** *85.1*	**978** *38.5*	**6533** *257.2*	**70** *88.2*	**795** *31.3*	**1169** *308.8*	**17.00/3.5**	15.00/3.5
Bar *Psi*	**4.5** *65*	**5** *73*	**5.5** *80*	**6** *87*	**6.5** *94*	**7** *102*	**7.25** *105*	**7.5** *109*	**7.75** *112*	**8** *116*		
Machine - Use (**kg** - *lbs*)	**TRANSPORT LOAD PER TIRE <= 18.5 T**											
STANDARD	**13950** *30760*	**15050** *33185*	**16300** *35942*	**17350** *38257*	**18500** *40793*							
Machine - Use (**kg** - *lbs*)	**TRANSPORT LOAD PER TIRE > 18.5 T**											
STANDARD						**19500** *42998*	**20000** *44100*	**20500** *45203*	**21000** *46305*	**21500** *47408*		

COMMERCIAL DESCRIPTION	CAI *MSPN*	Max. dist./ hour **km** *mile*	TKPH [1] *TMPH*	e **mm** *inch*	D **mm** *inch*	R' **mm** *inch*	RC **mm** *inch*	Tread depth **mm** *32rd*	Dual Spacing **mm** *inch*	Cap. **liter** *gallon*	Measuring [2] [3] Recommended Rim	Other Approved [2] [3] Rims
XV C E2 ** 24.00 R 35 Tubeless [9]	**271650** *10223*	**50** *31.1*	**740** *507*	**668** *26.3*	**2118** *83.4*	**947** *37.3*	**6372** *250.9*	**30** *37.8*	**825** *32.5*	**1264** *333.9*	**17.00/3.5**	15.00/3.5
Bar *Psi*	**4.5** *65*	**5** *73*	**5.5** *80*	**6** *87*	**6.5** *94*	**7** *102*	**7.5** *109*	**8** *116*				
Machine - Use (**kg** - *lbs*)	**TRANSPORT**											
STANDARD	**13950** *30760*	**15050** *33185*	**16300** *35942*	**17350** *38257*	**18500** *40793*	**19050** *42005*	**19625** *43273*	**20200** *44541*				

COMMERCIAL DESCRIPTION	CAI *MSPN*	Max. dist./ hour **km** *mile*	TKPH [1] *TMPH*	e **mm** *inch*	D **mm** *inch*	R' **mm** *inch*	RC **mm** *inch*	Tread depth **mm** *32rd*	Dual Spacing **mm** *inch*	Cap. **liter** *gallon*	Measuring [2] [3] Recommended Rim	Other Approved [2] [3] Rims
XTS E3T ** 29.5 R 35 Tubeless	**631225** *64173*	**29** *18*	**371** *254*	**777** *30.6*	**2116** *83.3*	**943** *37.1*	**6539** *257.4*	**45** *56.7*		**1494** *394.7*	**25.00/3.5**	27.00/3.5
Bar *Psi*	**3.5** *51*	**3.75** *54*	**4** *58*	**4.25** *62*	**4.5** *65*	**5** *73*	**5.5** *80*					
Machine - Use (**kg** - *lbs*)	**TRANSPORT**											
STANDARD	**13200** *29106*	**13900** *30650*	**14600** *32193*	**15300** *33737*	**16000** *35280*	**17400** *38367*	**18100** *39911*					

TIRE LOAD IN KG/LB – TIRE PRESSURE IN BAR/PSI

COMMERCIAL DESCRIPTION	CAI *MSPN*	Max. dist./ hour **km** *mile*	TKPH [1] *TMPH*	e **mm** *inch*	D **mm** *inch*	R' **mm** *inch*	RC **mm** *inch*	Tread depth **mm** *32rd*	Dual Spacing **mm** *inch*	Cap. **liter** *gallon*	Measuring [2] [3] Recommended Rim	Other Approved [2] [3] Rims
XRS B E4R ** **37.25 R 35 Tubeless**	**123673** *75762*	**22** *13.7*	**415** *284*	**947** *37.3*	**2364** *93.1*	**1063** *41.9*	**7127** *280.6*	**53** *66.8*		**2250** *594.4*	**31.00/4.0**	29.00/3.5
Bar *Psi*	**3.75** *54*	**4** *58*	**4.25** *62*	**4.5** *65*	**5** *73*	**5.5** *80*	**6** *87*	**6.5** *94*				
Machine - Use (**kg** - *lbs*)	**TRANSPORT**											
STANDARD	**17950** *39580*	**18500** *40793*	**19350** *42667*	**20200** *44541*	**21900** *48290*	**23600** *52038*	**24450** *53912*	**25300** *55787*				

COMMERCIAL DESCRIPTION	CAI *MSPN*	Max. dist./ hour **km** *mile*	TKPH [1] *TMPH*	e **mm** *inch*	D **mm** *inch*	R' **mm** *inch*	RC **mm** *inch*	Tread depth **mm** *32rd*	Dual Spacing **mm** *inch*	Cap. **liter** *gallon*	Measuring [2] [3] Recommended Rim	Other Approved [2] [3] Rims
XTS E3T ** **37.25 R 35 Tubeless**	**540244** *54190*	**29** *18*	**540** *370*	**956** *37.6*	**2370** *93.3*	**1070** *42.1*	**7157** *281.8*	**59** *74.3*		**2400** *634.1*	**31.00/4.0**	29.00/3.5
Bar *Psi*	**3.75** *54*	**4** *58*	**4.25** *62*	**4.5** *65*	**5** *73*	**5.5** *80*	**6** *87*	**6.5** *94*				
Machine - Use (**kg** - *lbs*)	**TRANSPORT**											
STANDARD	**17950** *39580*	**18500** *40793*	**19350** *42667*	**20200** *44541*	**21900** *48290*	**23600** *52038*	**24450** *53912*	**25300** *55787*				

39"

COMMERCIAL DESCRIPTION	CAI *MSPN*	Max. dist./ hour **km** *mile*	TKPH [1] *TMPH*	e **mm** *inch*	D **mm** *inch*	R' **mm** *inch*	RC **mm** *inch*	Tread depth **mm** *32rd*	Dual Spacing **mm** *inch*	Cap. **liter** *gallon*	Measuring [2] [3] Recommended Rim	Other Approved [2] [3] Rims
XRS E4R ** **37.5 R 39 Tubeless**	**856011** *45909*	**22** *13.7*	**453** *310*	**976** *38.4*	**2517** *99.1*	**1129** *44.4*	**7583** *298.5*	**56** *70.6*		**2624** *693.3*	**32.00/4.5**	
Bar *Psi*	**3** *44*	**3.5** *51*	**4** *58*	**4.25** *62*	**4.5** *65*	**5** *73*	**5.5** *80*	**6** *87*				
Machine - Use (**kg** - *lbs*)	**TRANSPORT**											
STANDARD	**18100** *39911*	**20000** *44100*	**21900** *48290*	**22900** *50495*	**23850** *52589*	**25750** *56779*	**26700** *58874*	**27650** *60968*				

COMMERCIAL DESCRIPTION	CAI *MSPN*	Max. dist./ hour **km** *mile*	TKPH [1] *TMPH*	e **mm** *inch*	D **mm** *inch*	R' **mm** *inch*	RC **mm** *inch*	Tread depth **mm** *32rd*	Dual Spacing **mm** *inch*	Cap. **liter** *gallon*	Measuring [2] [3] Recommended Rim	Other Approved [2] [3] Rims
XMS B E3R ** **40.5/75 R 39 Tubeless**	**379296** *93211*	**33** *20.5*	**766** *525*	**998** *39.3*	**2588** *101.9*	**1151** *45.3*	**7770** *305.9*	**51** *64.3*		**2940** *776.7*	**32.00/4.5**	
Bar *Psi*	**3** *44*	**3.5** *51*	**4** *58*	**4.25** *62*	**4.5** *65*	**5** *73*	**5.5** *80*	**6** *87*				
Machine - Use (**kg** - *lbs*)	**TRANSPORT**											
STANDARD	**20200** *44541*	**22400** *49392*	**24600** *54243*	**25700** *56669*	**26800** *59094*	**29000** *63945*	**30100** *66371*	**31200** *68796*				

COMMERCIAL DESCRIPTION	CAI *MSPN*	Max. dist./ hour **km** *mile*	TKPH [1] *TMPH*	e **mm** *inch*	D **mm** *inch*	R' **mm** *inch*	RC **mm** *inch*	Tread depth **mm** *32rd*	Dual Spacing **mm** *inch*	Cap. **liter** *gallon*	Measuring [2] [3] Recommended Rim	Other Approved [2] [3] Rims
XLD D2 L5 ** 242A2 **45/65 R 39 Tubeless**	**519947** *48376*	**10** *6.2*		**1102** *43.4*	**2580** *101.6*	**1116** *43.9*	**7668** *301.9*	**115** *144.9*		**2760** *729.2*	**36.00/4.5**	32.00/4.5
Bar *Psi*	**3** *44*	**3.5** *51*	**4** *58*	**4.5** *65*	**5** *73*	**5.5** *80*	**6** *87*	**6.5** *94*				
Machine - Use (**kg** - *lbs*)	**LOADER**											
FRONT LADEN	**26500** *58433*	**30000** *66150*	**33500** *73868*	**36500** *80483*	**40000** *88200*	**42500** *93713*	**45000** *99225*	**47500** *104738*				
REAR UNLADEN	**21200** *46746*	**24000** *52920*	**26800** *59094*	**29200** *64386*	**32000** *70560*	**34000** *74970*	**36000** *79380*	**38000** *83790*				

TIRE LOAD IN KG/LB – TIRE PRESSURE IN BAR/PSI

COMMERCIAL DESCRIPTION	CAI *MSPN*	Max. dist./ hour **km** *mile*	TKPH [1] *TMPH*	e **mm** *inch*	D **mm** *inch*	R' **mm** *inch*	RC **mm** *inch*	Tread depth **mm** *32rd*	Dual Spacing **mm** *inch*	Cap. **liter** *gallon*	Measuring [2] [3] Recommended Rim	Other Approved [2] [3] Rims
XMINE D2 L5 ** 242A2 45/65 R 39 Tubeless	**785703** *01004*	**6** *3.7*		**1099** *43.3*	**2583** *101.7*	**1132** *44.6*	**7715** *303.7*	**116** *146.1*		**2712** *716.5*	**36.00/4.5**	32.00/4.5

Bar *Psi*	**3** *44*	**3.5** *51*	**4** *58*	**4.5** *65*	**5** *73*	**5.5** *80*	**6** *87*	**6.5** *94*	
Machine - Use (**kg** - *lbs*)	**LOADER**								
FRONT LADEN	**26500** *58433*	**30000** *66150*	**33500** *73868*	**36500** *80483*	**40000** *88200*	**42500** *93713*	**45000** *99225*	**47500** *104738*	
REAR UNLADEN	**21200** *46746*	**24000** *52920*	**26800** *59094*	**29200** *64386*	**32000** *70560*	**34000** *74970*	**36000** *79380*	**38000** *83790*	

45"

COMMERCIAL DESCRIPTION	CAI *MSPN*	Max. dist./ hour **km** *mile*	TKPH [1] *TMPH*	e **mm** *inch*	D **mm** *inch*	R' **mm** *inch*	RC **mm** *inch*	Tread depth **mm** *32rd*	Dual Spacing **mm** *inch*	Cap. **liter** *gallon*	Measuring [2] [3] Recommended Rim	Other Approved [2] [3] Rims
XMINE D2 L5 ** 244A2 45/65 R 45 Tubeless	**651716** *00821*	**6** *3.7*		**1159** *45.6*	**2699** *106.3*	**1193** *47*	**8087** *318.4*	**116** *146.1*		**3020** *797.9*	**36.00/4.5**	

Bar *Psi*	**4** *58*	**4.5** *65*	**5** *73*	**5.5** *80*	**6** *87*	**6.5** *94*			
Machine - Use (**kg** - *lbs*)	**LOADER**								
FRONT LADEN	**35500** *78278*	**38750** *85444*	**42500** *93713*	**45000** *99225*	**47500** *104738*	**51500** *113558*			
REAR UNLADEN	**28400** *62622*	**31000** *68355*	**34000** *74970*	**36000** *79380*	**38000** *83790*	**41200** *90846*			

COMMERCIAL DESCRIPTION	CAI *MSPN*	Max. dist./ hour **km** *mile*	TKPH [1] *TMPH*	e **mm** *inch*	D **mm** *inch*	R' **mm** *inch*	RC **mm** *inch*	Tread depth **mm** *32rd*	Dual Spacing **mm** *inch*	Cap. **liter** *gallon*	Measuring [2] [3] Recommended Rim	Other Approved [2] [3] Rims
XLD D1 L4 ** 244A2 45/65 R 45 Tubeless	**733149** *78673*	**14** *8.7*		**1130** *44.5*	**2703** *106.4*	**1180** *46.5*	**8062** *317.4*	**71** *89.4*		**3330** *879.8*	**36.00/4.5**	

Bar *Psi*	**4** *58*	**4.5** *65*	**5** *73*	**5.5** *80*	**6** *87*	**6.5** *94*			
Machine - Use (**kg** - *lbs*)	**LOADER**								
FRONT LADEN	**35500** *78278*	**38750** *85444*	**42500** *93713*	**45000** *99225*	**47500** *104738*	**51500** *113558*			
REAR UNLADEN	**28400** *62622*	**31000** *68355*	**34000** *74970*	**36000** *79380*	**38000** *83790*	**41200** *90846*			

COMMERCIAL DESCRIPTION	CAI *MSPN*	Max. dist./ hour **km** *mile*	TKPH [1] *TMPH*	e **mm** *inch*	D **mm** *inch*	R' **mm** *inch*	RC **mm** *inch*	Tread depth **mm** *32rd*	Dual Spacing **mm** *inch*	Cap. **liter** *gallon*	Measuring [2] [3] Recommended Rim	Other Approved [2] [3] Rims
XLD D2 L5 ** 244A2 45/65 R 45 Tubeless	**871341** *79265*	**10** *6.2*		**1147** *45.2*	**2703** *106.4*	**1180** *46.5*	**8062** *317.4*	**115** *144.9*		**3020** *797.9*	**36.00/4.5**	

Bar *Psi*	**4** *58*	**4.5** *65*	**5** *73*	**5.5** *80*	**6** *87*	**6.5** *94*			
Machine - Use (**kg** - *lbs*)	**LOADER**								
FRONT LADEN	**35500** *78278*	**38750** *85444*	**42500** *93713*	**45000** *99225*	**47500** *104738*	**51500** *113558*			
REAR UNLADEN	**28400** *62622*	**31000** *68355*	**34000** *74970*	**36000** *79380*	**38000** *83790*	**41200** *90846*			

49"

COMMERCIAL DESCRIPTION	CAI *MSPN*	Max. dist./ hour **km** *mile*	TKPH [1] *TMPH*	e **mm** *inch*	D **mm** *inch*	R' **mm** *inch*	RC **mm** *inch*	Tread depth **mm** *32rd*	Dual Spacing **mm** *inch*	Cap. **liter** *gallon*	Measuring [2] [3] Recommended Rim	Other Approved [2] [3] Rims
XDR B E4R ** 24.00 R 49 Tubeless	**123235** *95269*	**26** *16.2*	**453** *310*	**662** *26.1*	**2529** *99.6*	**1147** *45.2*	**7651** *301.2*	**67** *84.4*	**806** *31.7*	**1466** *387.3*	**17.00/3.5**	

Bar *Psi*	**3.5** *51*	**4** *58*	**4.5** *65*	**5** *73*	**5.5** *80*	**6** *87*	**6.5** *94*	**7** *102*	**7.5** *109*	**8** *116*	
Machine - Use (**kg** - *lbs*)	**TRANSPORT**										
STANDARD	**13900** *30650*	**15250** *33626*	**16550** *36493*	**17850** *39359*	**19200** *42336*	**20500** *45203*	**21800** *48069*	**22450** *49502*	**23100** *50936*	**23350** *51487*	

TIRE LOAD IN KG/LB – TIRE PRESSURE IN BAR/PSI

COMMERCIAL DESCRIPTION	CAI *MSPN*	Max. dist./ hour **km** *mile*	TKPH [1] *TMPH*	e **mm** *inch*	D **mm** *inch*	R' **mm** *inch*	RC **mm** *inch*	Tread depth **mm** *32rd*	Dual Spacing **mm** *inch*	Cap. **liter** *gallon*	Measuring [2] [3] Recommended Rim	Other Approved [2] [3] Rims
XDR B4 E4R ** **24.00 R 49 Tubeless**	**123115** *64221*	**22** *13.7*	**384** *263*	**662** *26.1*	**2529** *99.6*	**1147** *45.2*	**7651** *301.2*	**67** *84.4*	**806** *31.7*	**1466** *387.3*	**17.00/3.5**	
Bar *Psi*	**3.5** *51*	**4** *58*	**4.5** *65*	**5** *73*	**5.5** *80*	**6** *87*	**6.5** *94*	**7** *102*	**7.5** *109*	**8** *116*		
Machine - Use (**kg** - *lbs*)	**TRANSPORT**											
STANDARD	**13900** *30650*	**15250** *33626*	**16550** *36493*	**17850** *39359*	**19200** *42336*	**20500** *45203*	**21800** *48069*	**22450** *49502*	**23100** *50936*	**23350** *51487*		

COMMERCIAL DESCRIPTION	CAI *MSPN*	Max. dist./ hour **km** *mile*	TKPH [1] *TMPH*	e **mm** *inch*	D **mm** *inch*	R' **mm** *inch*	RC **mm** *inch*	Tread depth **mm** *32rd*	Dual Spacing **mm** *inch*	Cap. **liter** *gallon*	Measuring [2] [3] Recommended Rim	Other Approved [2] [3] Rims
XD GRIP A4 E4T *** **27.00 R 49 Tubeless**	**527661** *07858*	**20** *12.4* *if load per tire <=27.2 t* **18** *11.2* *if load per tire >27.2 t*	**432** *296*	**733** *28.9*	**2726** *107.3*	**1235** *48.6*	**8242** *324.5*	**79** *99.5*	**892** *35.1*	**1970** *520.5*	**19.50/4.0 [3.2]**	19.50/4.0 [2.7]
Bar *Psi*	**3.5** *51*	**4** *58*	**4.5** *65*	**5** *73*	**5.5** *80*	**6** *87*	**6.5** *94*	**7** *102*	**7.5** *109*	**8** *116*		
Machine - Use (**kg** - *lbs*)	**TRANSPORT LOAD PER TIRE <= 27.25 T**											
STANDARD	**16850** *37154*	**18550** *40903*	**20300** *44762*	**22050** *48620*	**24000** *52920*	**25500** *56228*	**27250** *60086*					
Machine - Use (**kg** - *lbs*)	**TRANSPORT LOAD PER TIRE > 27.25 T**											
STANDARD										**29000** *63945*	**30000** *66150*	**32100** *70781*

COMMERCIAL DESCRIPTION	CAI *MSPN*	Max. dist./ hour **km** *mile*	TKPH [1] *TMPH*	e **mm** *inch*	D **mm** *inch*	R' **mm** *inch*	RC **mm** *inch*	Tread depth **mm** *32rd*	Dual Spacing **mm** *inch*	Cap. **liter** *gallon*	Measuring [2] [3] Recommended Rim	Other Approved [2] [3] Rims
XD GRIP B E4T *** **27.00 R 49 Tubeless**	**047262** *38092*	**32** *19.9* *if load per tire <=27.2 t* **30** *18.6* *if load per tire >27.2 t*	**720** *493*	**733** *28.9*	**2726** *107.3*	**1235** *48.6*	**8242** *324.5*	**79** *99.5*	**892** *35.1*	**1970** *520.5*	**19.50/4.0 [3.2]**	19.50/4.0 [2.7]
Bar *Psi*	**3.5** *51*	**4** *58*	**4.5** *65*	**5** *73*	**5.5** *80*	**6** *87*	**6.5** *94*	**7** *102*	**7.5** *109*	**8** *116*		
Machine - Use (**kg** - *lbs*)	**TRANSPORT LOAD PER TIRE <= 27.25 T**											
STANDARD	**16850** *37154*	**18550** *40903*	**20300** *44762*	**22050** *48620*	**24000** *52920*	**25500** *56228*	**27250** *60086*					
Machine - Use (**kg** - *lbs*)	**TRANSPORT LOAD PER TIRE > 27.25 T**											
STANDARD										**29000** *63945*	**30000** *66150*	**32100** *70781*

TIRE LOAD IN KG/LB – TIRE PRESSURE IN BAR/PSI

COMMERCIAL DESCRIPTION	CAI *MSPN*	Max. dist./ hour **km** *mile*	TKPH [1] *TMPH*	e **mm** *inch*	D **mm** *inch*	R' **mm** *inch*	RC **mm** *inch*	Tread depth **mm** *32rd*	Dual Spacing **mm** *inch*	Cap. **liter** *gallon*	Measuring [2] [3] Recommended Rim	Other Approved [2] [3] Rims
XD GRIP B4 E4T *** **27.00 R 49 Tubeless**	**349151** *17563*	**28** *17.4* *if load per tire <=27.2 t* **26** *16.2* *if load per tire >27.2 t*	**624** *427*	**733** *28.9*	**2726** *107.3*	**1235** *48.6*	**8242** *324.5*	**79** *99.5*	**892** *35.1*	**1970** *520.5*	**19.50/4.0 [3.2]**	19.50/4.0 [2.7]

Bar *Psi*	**3.5** *51*	**4** *58*	**4.5** *65*	**5** *73*	**5.5** *80*	**6** *87*	**6.5** *94*	**7** *102*	**7.5** *109*	**8** *116*
Machine - Use (**kg** - *lbs*)	**TRANSPORT LOAD PER TIRE <= 27.25 T**									
STANDARD	**16850** *37154*	**18550** *40903*	**20300** *44762*	**22050** *48620*	**24000** *52920*	**25500** *56228*	**27250** *60086*			
Machine - Use (**kg** - *lbs*)	**TRANSPORT LOAD PER TIRE > 27.25 T**									
STANDARD								**29000** *63945*	**30000** *66150*	**32100** *70781*

COMMERCIAL DESCRIPTION	CAI *MSPN*	Max. dist./ hour **km** *mile*	TKPH [1] *TMPH*	e **mm** *inch*	D **mm** *inch*	R' **mm** *inch*	RC **mm** *inch*	Tread depth **mm** *32rd*	Dual Spacing **mm** *inch*	Cap. **liter** *gallon*	Measuring [2] [3] Recommended Rim	Other Approved [2] [3] Rims
XD MINEWORKS E4R ** **27.00 R 49 Tubeless** [9]	**716130** *83794*	**25** *15.5*	**545** *373*	**735** *28.9*	**2672** *105.2*	**1206** *47.5*	**8068** *317.6*	**66** *83.1*	**892** *35.1*	**1969** *520.2*	**19.50/4.0 [3.2]**	19.50/4.0 [2.7]

Bar *Psi*	**3.5** *51*	**4** *58*	**4.5** *65*	**5** *73*	**5.5** *80*	**6** *87*	**6.5** *94*	**7** *102*	**7.5** *109*	**8** *116*
Machine - Use (**kg** - *lbs*)	**TRANSPORT LOAD PER TIRE <= 27.25 T**									
STANDARD	**16850** *37154*	**18550** *40903*	**20300** *44762*	**22050** *48620*	**24000** *52920*	**25500** *56228*	**27250** *60086*	**28100** *61961*	**29000** *63945*	

COMMERCIAL DESCRIPTION	CAI *MSPN*	Max. dist./ hour **km** *mile*	TKPH [1] *TMPH*	e **mm** *inch*	D **mm** *inch*	R' **mm** *inch*	RC **mm** *inch*	Tread depth **mm** *32rd*	Dual Spacing **mm** *inch*	Cap. **liter** *gallon*	Measuring [2] [3] Recommended Rim	Other Approved [2] [3] Rims
XDR3 B E4R *** **27.00 R 49 Tubeless**	**764857** *22060*	**28** *17.4* *if load per tire <=27.2 t* **26** *16.2* *if load per tire >27.2 t*	**624** *427*	**730** *28.7*	**2730** *107.5*	**1236** *48.7*	**8252** *324.9*	**90** *113.4*	**892** *35.1*	**1970** *520.5*	**19.50/4.0 [3.2]**	19.50/4.0 [2.7]

Bar *Psi*	**3.5** *51*	**4** *58*	**4.5** *65*	**5** *73*	**5.5** *80*	**6** *87*	**6.5** *94*	**7** *102*	**7.5** *109*	**8** *116*
Machine - Use (**kg** - *lbs*)	**TRANSPORT LOAD PER TIRE <= 27.25 T**									
STANDARD	**16850** *37154*	**18550** *40903*	**20300** *44762*	**22050** *48620*	**24000** *52920*	**25500** *56228*	**27250** *60086*			
Machine - Use (**kg** - *lbs*)	**TRANSPORT LOAD PER TIRE > 27.25 T**									
STANDARD								**29000** *63945*	**30000** *66150*	**32100** *70781*

COMMERCIAL DESCRIPTION	CAI *MSPN*	Max. dist./ hour **km** *mile*	TKPH [1] *TMPH*	e **mm** *inch*	D **mm** *inch*	R' **mm** *inch*	RC **mm** *inch*	Tread depth **mm** *32rd*	Dual Spacing **mm** *inch*	Cap. **liter** *gallon*	Measuring [2] [3] Recommended Rim	Other Approved [2] [3] Rims
XDR3 B4 E4R *** **27.00 R 49 Tubeless**	**395114** *24794*	**24** *14.9* *if load per tire <=27.2 t* **22** *13.7* *if load per tire >27.2 t*	**528** *362*	**730** *28.7*	**2730** *107.5*	**1236** *48.7*	**8252** *324.9*	**90** *113.4*	**892** *35.1*	**1970** *520.5*	**19.50/4.0 [3.2]**	19.50/4.0 [2.7]

Bar *Psi*	**3.5** *51*	**4** *58*	**4.5** *65*	**5** *73*	**5.5** *80*	**6** *87*	**6.5** *94*	**7** *102*	**7.5** *109*	**8** *116*
Machine - Use (**kg** - *lbs*)	**TRANSPORT LOAD PER TIRE <= 27.25 T**									
STANDARD	**16850** *37154*	**18550** *40903*	**20300** *44762*	**22050** *48620*	**24000** *52920*	**25500** *56228*	**27250** *60086*			
Machine - Use (**kg** - *lbs*)	**TRANSPORT LOAD PER TIRE > 27.25 T**									
STANDARD								**29000** *63945*	**30000** *66150*	**32100** *70781*

TIRE LOAD IN KG/LB – TIRE PRESSURE IN BAR/PSI

COMMERCIAL DESCRIPTION	CAI *MSPN*	Max. dist./ hour **km** *mile*	TKPH [1] *TMPH*	e **mm** *inch*	D **mm** *inch*	R' **mm** *inch*	RC **mm** *inch*	Tread depth **mm** *32rd*	Dual Spacing **mm** *inch*	Cap. **liter** *gallon*	Measuring [2] [3] Recommended Rim	Other Approved [2] [3] Rims
XDR3 A E4R *** **27.00 R 49 Tubeless**	**667421**	**20** *12.4* *if load per tire <=27.2 t* **18** *11.2* *if load per tire >27.2 t*	**432** *296*	**730** *28.7*	**2730** *107.5*	**1236** *48.7*	**8252** *324.9*	**90** *113.4*	**892** *35.1*	**1970** *520.5*	**19.50/4.0 [3.2]**	19.50/4.0 [2.7]
Bar *Psi*	**3.5** *51*	**4** *58*	**4.5** *65*	**5** *73*	**5.5** *80*	**6** *87*	**6.5** *94*	**7** *102*	**7.5** *109*	**8** *116*		
Machine - Use (**kg** - *lbs*)	**TRANSPORT LOAD PER TIRE <= 27.25 T**											
STANDARD	**16850** *37154*	**18550** *40903*	**20300** *44762*	**22050** *48620*	**24000** *52920*	**25500** *56228*	**27250** *60086*					
Machine - Use (**kg** - *lbs*)	**TRANSPORT LOAD PER TIRE > 27.25 T**											
STANDARD										**29000** *63945*	**30000** *66150*	**32100** *70781*

COMMERCIAL DESCRIPTION	CAI *MSPN*	Max. dist./ hour **km** *mile*	TKPH [1] *TMPH*	e **mm** *inch*	D **mm** *inch*	R' **mm** *inch*	RC **mm** *inch*	Tread depth **mm** *32rd*	Dual Spacing **mm** *inch*	Cap. **liter** *gallon*	Measuring [2] [3] Recommended Rim	Other Approved [2] [3] Rims
X-TRACTION RD B E4T ** **27.00 R 49 Tubeless**	**470320** *10116*	**30** *18.6*	**654** *448*	**743** *29.3*	**2737** *107.8*	**1234** *48.6*	**8262** *325.3*	**81** *102*	**892** *35.1*	**2045** *540.3*	**19.50/4.0 [3.2]**	19.50/4.0 [2.7] 22.00/4.0
Bar *Psi*	**3.5** *51*	**4** *58*	**4.5** *65*	**5** *73*	**5.5** *80*	**6** *87*	**6.5** *94*	**7** *102*	**7.5** *109*	**8** *116*		
Machine - Use (**kg** - *lbs*)	**TRANSPORT**											
STANDARD	**16850** *37154*	**18550** *40903*	**20300** *44762*	**22050** *48620*	**24000** *52920*	**25500** *56228*	**27250** *60086*	**28100** *61961*	**29000** *63945*	**29850** *65819*		

COMMERCIAL DESCRIPTION	CAI *MSPN*	Max. dist./ hour **km** *mile*	TKPH [1] *TMPH*	e **mm** *inch*	D **mm** *inch*	R' **mm** *inch*	RC **mm** *inch*	Tread depth **mm** *32rd*	Dual Spacing **mm** *inch*	Cap. **liter** *gallon*	Measuring [2] [3] Recommended Rim	Other Approved [2] [3] Rims
X-TRACTION RD B4 E4T ** **27.00 R 49 Tubeless**	**166905** *68679*	**26** *16.2*	**567** *388*	**743** *29.3*	**2737** *107.8*	**1234** *48.6*	**8262** *325.3*	**81** *102*	**892** *35.1*	**2045** *540.3*	**19.50/4.0 [3.2]**	19.50/4.0 [2.7] 22.00/4.0
Bar *Psi*	**3.5** *51*	**4** *58*	**4.5** *65*	**5** *73*	**5.5** *80*	**6** *87*	**6.5** *94*	**7** *102*	**7.5** *109*	**8** *116*		
Machine - Use (**kg** - *lbs*)	**TRANSPORT**											
STANDARD	**16850** *37154*	**18550** *40903*	**20300** *44762*	**22050** *48620*	**24000** *52920*	**25500** *56228*	**27250** *60086*	**28100** *61961*	**29000** *63945*	**29850** *65819*		

COMMERCIAL DESCRIPTION	CAI *MSPN*	Max. dist./ hour **km** *mile*	TKPH [1] *TMPH*	e **mm** *inch*	D **mm** *inch*	R' **mm** *inch*	RC **mm** *inch*	Tread depth **mm** *32rd*	Dual Spacing **mm** *inch*	Cap. **liter** *gallon*	Measuring [2] [3] Recommended Rim	Other Approved [2] [3] Rims
X-TRACTION RD A4 E4T ** **27.00 R 49 Tubeless**	**495676** *38957*	**18** *11.2*	**392** *269*	**743** *29.3*	**2737** *107.8*	**1234** *48.6*	**8262** *325.3*	**81** *102*	**892** *35.1*	**2045** *540.3*	**19.50/4.0 [3.2]**	19.50/4.0 [2.7] 22.00/4.0
Bar *Psi*	**3.5** *51*	**4** *58*	**4.5** *65*	**5** *73*	**5.5** *80*	**6** *87*	**6.5** *94*	**7** *102*	**7.5** *109*	**8** *116*		
Machine - Use (**kg** - *lbs*)	**TRANSPORT**											
STANDARD	**16850** *37154*	**18550** *40903*	**20300** *44762*	**22050** *48620*	**24000** *52920*	**25500** *56228*	**27250** *60086*	**28100** *61961*	**29000** *63945*	**29850** *65819*		

COMMERCIAL DESCRIPTION	CAI *MSPN*	Max. dist./ hour **km** *mile*	TKPH [1] *TMPH*	e **mm** *inch*	D **mm** *inch*	R' **mm** *inch*	RC **mm** *inch*	Tread depth **mm** *32rd*	Dual Spacing **mm** *inch*	Cap. **liter** *gallon*	Measuring [2] [3] Recommended Rim	Other Approved [2] [3] Rims
X-TRACTION S RD B E3T ** **27.00 R 49 Tubeless**	**689287** *35019*	**35** *21.7*	**763** *523*	**746** *29.4*	**2647** *104.2*	**1190** *46.9*	**7982** *314.3*	**46** *58*	**892** *35.1*	**2045** *540.3*	**19.50/4.0 [3.2]**	19.50/4.0 [2.7] 22.00/4.0
Bar *Psi*	**3.5** *51*	**4** *58*	**4.5** *65*	**5** *73*	**5.5** *80*	**6** *87*	**6.5** *94*	**7** *102*	**7.5** *109*	**8** *116*		
Machine - Use (**kg** - *lbs*)	**TRANSPORT**											
STANDARD	**16850** *37154*	**18550** *40903*	**20300** *44762*	**22050** *48620*	**24000** *52920*	**25500** *56228*	**27250** *60086*	**28100** *61961*	**29000** *63945*	**29850** *65819*		

TIRE LOAD IN KG/LB – TIRE PRESSURE IN BAR/PSI

COMMERCIAL DESCRIPTION	CAI *MSPN*	Max. dist./ hour **km** *mile*	TKPH [1] *TMPH*	e **mm** *inch*	D **mm** *inch*	R' **mm** *inch*	RC **mm** *inch*	Tread depth **mm** *32rd*	Dual Spacing **mm** *inch*	Cap. **liter** *gallon*	Measuring [2] [3] Recommended Rim	Other Approved [2] [3] Rims
XV C E2 ** **27.00 R 49 Tubeless** [9]	**280557** *06957*	**50** *31.1*	**1090** *747*	**745** *29.3*	**2648** *104.3*	**1170** *46.1*	**7934** *312.4*	**33** *41.6*	**909** *35.8*	**2060** *544.3*	**19.50/4.0 [3.2]**	19.50/4.0 [2.7] 22.00/4.0
Bar *Psi*	**3.5** *51*	**4** *58*	**4.5** *65*	**5** *73*	**5.5** *80*	**6** *87*	**6.5** *94*	**7** *102*	**7.5** *109*	**8** *116*		
Machine - Use (**kg** - *lbs*)	**TRANSPORT**											
STANDARD	**16850** *37154*	**18550** *40903*	**20300** *44762*	**22050** *48620*	**24000** *52920*	**25500** *56228*	**27250** *60086*	**28100** *61961*	**29000** *63945*	**29850** *65819*		

51"

COMMERCIAL DESCRIPTION	CAI *MSPN*	Max. dist./ hour **km** *mile*	TKPH [1] *TMPH*	e **mm** *inch*	D **mm** *inch*	R' **mm** *inch*	RC **mm** *inch*	Tread depth **mm** *32rd*	Dual Spacing **mm** *inch*	Cap. **liter** *gallon*	Measuring [2] [3] Recommended Rim	Other Approved [2] [3] Rims
XDR+ MC E4R ** **30.00 R 51 Tubeless**	**765099** *62720*	**30** *18.6*	**804** *551*	**835** *32.9*	**2878** *113.3*	**1288** *50.7*	**8662** *341*	**83** *104.6*	**1006** *39.6*	**2490** *657.9*	**22.00/4.5**	
Bar *Psi*	**3.5** *51*	**4** *58*	**4.5** *65*	**5** *73*	**5.5** *80*	**6** *87*	**6.5** *94*	**7** *102*				
Machine - Use (**kg** - *lbs*)	**TRANSPORT**											
STANDARD	**22100** *48731*	**24350** *53692*	**26650** *58763*	**28950** *63835*	**31200** *68796*	**33500** *73868*	**34650** *76403*	**35800** *78939*				

COMMERCIAL DESCRIPTION	CAI *MSPN*	Max. dist./ hour **km** *mile*	TKPH [1] *TMPH*	e **mm** *inch*	D **mm** *inch*	R' **mm** *inch*	RC **mm** *inch*	Tread depth **mm** *32rd*	Dual Spacing **mm** *inch*	Cap. **liter** *gallon*	Measuring [2] [3] Recommended Rim	Other Approved [2] [3] Rims
XDR+ MB E4R ** **33.00 R 51 Tubeless**	**217595** *60919*	**24** *14.9*	**643** *440*	**835** *32.9*	**2878** *113.3*	**1288** *50.7*	**8662** *341*	**83** *104.6*	**1006** *39.6*	**2490** *657.9*	**22.00/4.5**	
Bar *Psi*	**3.5** *51*	**4** *58*	**4.5** *65*	**5** *73*	**5.5** *80*	**6** *87*	**6.5** *94*	**7** *102*				
Machine - Use (**kg** - *lbs*)	**TRANSPORT**											
STANDARD	**22100** *48731*	**24350** *53692*	**26650** *58763*	**28950** *63835*	**31200** *68796*	**33500** *73868*	**34650** *76403*	**35800** *78939*				

COMMERCIAL DESCRIPTION	CAI *MSPN*	Max. dist./ hour **km** *mile*	TKPH [1] *TMPH*	e **mm** *inch*	D **mm** *inch*	R' **mm** *inch*	RC **mm** *inch*	Tread depth **mm** *32rd*	Dual Spacing **mm** *inch*	Cap. **liter** *gallon*	Measuring [2] [3] Recommended Rim	Other Approved [2] [3] Rims
XDT A E4T ** **33.00 R 51 Tubeless**	**123971** *79398*	**22** *13.7*	**682** *467*	**911** *35.9*	**3040** *119.7*	**1365** *53.7*	**9161** *360.7*	**87** *109.6*	**1107** *43.6*	**3090** *816.4*	**24.00/5.0 [4.4]**	24.00/5.0 [3.9]
Bar *Psi*	**3.5** *51*	**4** *58*	**4.5** *65*	**5** *73*	**5.5** *80*	**6** *87*	**6.5** *94*	**7** *102*				
Machine - Use (**kg** - *lbs*)	**TRANSPORT**											
STANDARD	**25550** *56338*	**28200** *62181*	**30800** *67914*	**33450** *73757*	**36600** *80703*	**38750** *85444*	**40100** *88421*	**41400** *91287*				

COMMERCIAL DESCRIPTION	CAI *MSPN*	Max. dist./ hour **km** *mile*	TKPH [1] *TMPH*	e **mm** *inch*	D **mm** *inch*	R' **mm** *inch*	RC **mm** *inch*	Tread depth **mm** *32rd*	Dual Spacing **mm** *inch*	Cap. **liter** *gallon*	Measuring [2] [3] Recommended Rim	Other Approved [2] [3] Rims
XDT B E4T ** **33.00 R 51 Tubeless**	**123961** *53227*	**30** *18.6*	**930** *637*	**911** *35.9*	**3040** *119.7*	**1365** *53.7*	**9161** *360.7*	**87** *109.6*	**1107** *43.6*	**3090** *816.4*	**24.00/5.0 [4.4]**	24.00/5.0 [3.9]
Bar *Psi*	**3.5** *51*	**4** *58*	**4.5** *65*	**5** *73*	**5.5** *80*	**6** *87*	**6.5** *94*	**7** *102*				
Machine - Use (**kg** - *lbs*)	**TRANSPORT**											
STANDARD	**25550** *56338*	**28200** *62181*	**30800** *67914*	**33450** *73757*	**36600** *80703*	**38750** *85444*	**40100** *88421*	**41400** *91287*				

COMMERCIAL DESCRIPTION	CAI *MSPN*	Max. dist./ hour **km** *mile*	TKPH [1] *TMPH*	e **mm** *inch*	D **mm** *inch*	R' **mm** *inch*	RC **mm** *inch*	Tread depth **mm** *32rd*	Dual Spacing **mm** *inch*	Cap. **liter** *gallon*	Measuring [2] [3] Recommended Rim	Other Approved [2] [3] Rims
XDC C4 E3V ** **33.00 R 51 Tubeless** [9]	**645788** *28097*	**45** *28*	**1395** *956*	**889** *35*	**2966** *116.8*	**1318** *51.9*	**8903** *350.5*	**48** *60.5*	**1107** *43.6*		**24.00/5.0 [4.4]**	24.00/5.0 [3.9]
Bar *Psi*	**3.5** *51*	**4** *58*	**4.5** *65*	**5** *73*	**5.5** *80*	**6** *87*	**6.5** *94*	**7** *102*				
Machine - Use (**kg** - *lbs*)	**TRANSPORT**											
STANDARD	**25550** *56338*	**28200** *62181*	**30800** *67914*	**33450** *73757*	**36600** *80703*	**38750** *85444*	**40100** *88421*	**41400** *91287*				

TIRE LOAD IN KG/LB – TIRE PRESSURE IN BAR/PSI

COMMERCIAL DESCRIPTION	CAI *MSPN*	Max. dist./ hour **km** *mile*	TKPH [1] *TMPH*	e **mm** *inch*	D **mm** *inch*	R' **mm** *inch*	RC **mm** *inch*	Tread depth **mm** *32rd*	Dual Spacing **mm** *inch*	Cap. **liter** *gallon*	Measuring [2] [3] Recommended Rim	Other Approved [2] [3] Rims
XDR3 C4 E4R ** **33.00 R 51 Tubeless**	**691960** *78629*	**27** *16.8*	**837** *573*	**921** *36.3*	**3049** *120*	**1363** *53.7*	**9174** *361.2*	**94** *118.4*	**1074** *42.3*	**3100** *819*	**24.00/5.0 [4.4]**	24.00/5.0 [3.9] 26.00/5.0
Bar *Psi*	**3.5** *51*	**4** *58*	**4.5** *65*	**5** *73*	**5.5** *80*	**6** *87*	**6.5** *94*	**7** *102*	**7.5** *109*			
Machine - Use (**kg** - *lbs*)	**TRANSPORT**											
STANDARD	**25550** *56338*	**28200** *62181*	**30800** *67914*	**33450** *73757*	**36600** *80703*	**38750** *85444*	**40100** *88421*	**41400** *91287*	**42700** *94154*			

COMMERCIAL DESCRIPTION	CAI *MSPN*	Max. dist./ hour **km** *mile*	TKPH [1] *TMPH*	e **mm** *inch*	D **mm** *inch*	R' **mm** *inch*	RC **mm** *inch*	Tread depth **mm** *32rd*	Dual Spacing **mm** *inch*	Cap. **liter** *gallon*	Measuring [2] [3] Recommended Rim	Other Approved [2] [3] Rims
XDR3 B E4R ** **33.00 R 51 Tubeless**	**884959** *05483*	**24** *14.9*	**744** *510*	**921** *36.3*	**3049** *120*	**1343** *52.9*	**9124** *359.2*	**94** *118.4*	**1074** *42.3*	**3100** *819*	**24.00/5.0 [4.4]**	24.00/5.0 [3.9] 26.00/5.0
Bar *Psi*	**3.5** *51*	**4** *58*	**4.5** *65*	**5** *73*	**5.5** *80*	**6** *87*	**6.5** *94*	**7** *102*	**7.5** *109*			
Machine - Use (**kg** - *lbs*)	**TRANSPORT**											
STANDARD	**25550** *56338*	**28200** *62181*	**30800** *67914*	**33450** *73757*	**36600** *80703*	**38750** *85444*	**40100** *88421*	**41400** *91287*	**42700** *94154*			

COMMERCIAL DESCRIPTION	CAI *MSPN*	Max. dist./ hour **km** *mile*	TKPH [1] *TMPH*	e **mm** *inch*	D **mm** *inch*	R' **mm** *inch*	RC **mm** *inch*	Tread depth **mm** *32rd*	Dual Spacing **mm** *inch*	Cap. **liter** *gallon*	Measuring [2] [3] Recommended Rim	Other Approved [2] [3] Rims
XDR3 B4 E4R ** **33.00 R 51 Tubeless**	**089608** *05115*	**20** *12.4*	**620** *425*	**921** *36.3*	**3049** *120*	**1363** *53.7*	**9174** *361.2*	**94** *118.4*	**1074** *42.3*	**3100** *819*	**24.00/5.0 [4.4]**	24.00/5.0 [3.9] 26.00/5.0
Bar *Psi*	**3.5** *51*	**4** *58*	**4.5** *65*	**5** *73*	**5.5** *80*	**6** *87*	**6.5** *94*	**7** *102*	**7.5** *109*			
Machine - Use (**kg** - *lbs*)	**TRANSPORT**											
STANDARD	**25550** *56338*	**28200** *62181*	**30800** *67914*	**33450** *73757*	**36600** *80703*	**38750** *85444*	**40100** *88421*	**41400** *91287*	**42700** *94154*			

COMMERCIAL DESCRIPTION	CAI *MSPN*	Max. dist./ hour **km** *mile*	TKPH [1] *TMPH*	e **mm** *inch*	D **mm** *inch*	R' **mm** *inch*	RC **mm** *inch*	Tread depth **mm** *32rd*	Dual Spacing **mm** *inch*	Cap. **liter** *gallon*	Measuring [2] [3] Recommended Rim	Other Approved [2] [3] Rims
XDC C4 E3V ** **36.00 R 51 Tubeless [9]**	**975610** *00557*	**40** *24.9*	**1480** *1014*	**1008** *39.7*	**3145** *123.8*	**1376** *54.2*	**9388** *369.6*	**57** *71.8*	**1225** *48.2*	**3980** *1051.5*	**26.00/5.0**	
Bar *Psi*	**3.5** *51*	**4** *58*	**4.5** *65*	**5** *73*	**5.5** *80*	**6** *87*	**6.5** *94*	**7** *102*	**7.5** *109*			
Machine - Use (**kg** - *lbs*)	**TRANSPORT**											
STANDARD	**30450** *67142*	**33600** *74088*	**36800** *81144*	**39950** *88090*	**43100** *95036*	**46250** *101981*	**47850** *105509*	**49400** *108927*	**51000** *112455*			

COMMERCIAL DESCRIPTION	CAI *MSPN*	Max. dist./ hour **km** *mile*	TKPH [1] *TMPH*	e **mm** *inch*	D **mm** *inch*	R' **mm** *inch*	RC **mm** *inch*	Tread depth **mm** *32rd*	Dual Spacing **mm** *inch*	Cap. **liter** *gallon*	Measuring [2] [3] Recommended Rim	Other Approved [2] [3] Rims
XDC B E3V ** **36.00 R 51 Tubeless [9]**	**320300** *59360*	**37** *23*	**1369** *938*	**1008** *39.7*	**3145** *123.8*	**1376** *54.2*	**9388** *369.6*	**57** *71.8*	**1225** *48.2*	**3980** *1051.5*	**26.00/5.0**	
Bar *Psi*	**3.5** *51*	**4** *58*	**4.5** *65*	**5** *73*	**5.5** *80*	**6** *87*	**6.5** *94*	**7** *102*	**7.5** *109*			
Machine - Use (**kg** - *lbs*)	**TRANSPORT**											
STANDARD	**30450** *67142*	**33600** *74088*	**36800** *81144*	**39950** *88090*	**43100** *95036*	**46250** *101981*	**47850** *105509*	**49400** *108927*	**51000** *112455*			

COMMERCIAL DESCRIPTION	CAI *MSPN*	Max. dist./ hour **km** *mile*	TKPH [1] *TMPH*	e **mm** *inch*	D **mm** *inch*	R' **mm** *inch*	RC **mm** *inch*	Tread depth **mm** *32rd*	Dual Spacing **mm** *inch*	Cap. **liter** *gallon*	Measuring [2] [3] Recommended Rim	Other Approved [2] [3] Rims
XDR B E4R ** **36.00 R 51 Tubeless**	**123122** *50173*	**24** *14.9*	**888** *608*	**1011** *39.8*	**3215** *126.6*	**1429** *56.3*	**9653** *380*	**96** *120.9*	**1225** *48.2*	**3980** *1051.5*	**26.00/5.0**	
Bar *Psi*	**3.5** *51*	**4** *58*	**4.5** *65*	**5** *73*	**5.5** *80*	**6** *87*	**6.5** *94*	**7** *102*	**7.5** *109*			
Machine - Use (**kg** - *lbs*)	**TRANSPORT**											
STANDARD	**30450** *67142*	**33600** *74088*	**36800** *81144*	**39950** *88090*	**43100** *95036*	**46250** *101981*	**47850** *105509*	**49400** *108927*	**51000** *112455*			

TIRE LOAD IN KG/LB – TIRE PRESSURE IN BAR/PSI

COMMERCIAL DESCRIPTION	CAI *MSPN*	Max. dist./ hour **km** *mile*	TKPH [1] *TMPH*	e **mm** *inch*	D **mm** *inch*	R' **mm** *inch*	RC **mm** *inch*	Tread depth **mm** *32rd*	Dual Spacing **mm** *inch*	Cap. **liter** *gallon*	Measuring [2] [3] Recommended Rim	Other Approved [2] [3] Rims
XDR B4 E4R ** **36.00 R 51 Tubeless**	**123002** *87111*	**20** *12.4*	**740** *507*	**1011** *39.8*	**3215** *126.6*	**1430** *56.3*	**9653** *380*	**96** *120.9*	**1225** *48.2*	**3980** *1051.5*	**26.00/5.0**	

Bar *Psi*	**3.5** *51*	**4** *58*	**4.5** *65*	**5** *73*	**5.5** *80*	**6** *87*	**6.5** *94*	**7** *102*	**7.5** *109*
Machine - Use (**kg** - *lbs*)	**TRANSPORT**								
STANDARD	**30450** *67142*	**33600** *74088*	**36800** *81144*	**39950** *88090*	**43100** *95036*	**46250** *101981*	**47850** *105509*	**49400** *108927*	**51000** *112455*

COMMERCIAL DESCRIPTION	CAI *MSPN*	Max. dist./ hour **km** *mile*	TKPH [1] *TMPH*	e **mm** *inch*	D **mm** *inch*	R' **mm** *inch*	RC **mm** *inch*	Tread depth **mm** *32rd*	Dual Spacing **mm** *inch*	Cap. **liter** *gallon*	Measuring [2] [3] Recommended Rim	Other Approved [2] [3] Rims
XMINE D2 HR L5R ** **50/65 R 51 Tubeless**	**523260** *00296*	**6** *3.7*		**1273** *50.1*	**3073** *121*	**1366** *53.8*	**9227** *363.3*	**116** *146.1*		**4463** *1179.1*	**40.00/4.5**	

Bar *Psi*	**4** *58*	**4.5** *65*	**5** *73*	**5.5** *80*	**6** *87*	**6.35** *92*
Machine - Use (**kg** - *lbs*)	**LOADERS**					
FRONT LADEN	**46500** *102533*	**50500** *111353*	**54500** *120173*	**58500** *128993*	**62500** *137813*	**65000** *143325*
REAR UNLADEN	**37200** *82026*	**40400** *89082*	**43600** *96138*	**46800** *103194*	**50000** *110250*	**52000** *114660*

COMMERCIAL DESCRIPTION	CAI *MSPN*	Max. dist./ hour **km** *mile*	TKPH [1] *TMPH*	e **mm** *inch*	D **mm** *inch*	R' **mm** *inch*	RC **mm** *inch*	Tread depth **mm** *32rd*	Dual Spacing **mm** *inch*	Cap. **liter** *gallon*	Measuring [2] [3] Recommended Rim	Other Approved [2] [3] Rims
XMINE D2 LC L5R ** **50/65 R 51 Tubeless**	**508706** *08094*	**10** *6.2*		**1273** *50.1*	**3073** *121*	**1366** *53.8*	**9227** *363.3*	**116** *146.1*		**4463** *1179.1*	**40.00/4.5**	

Bar *Psi*	**4** *58*	**4.5** *65*	**5** *73*	**5.5** *80*	**6** *87*	**6.35** *92*
Machine - Use (**kg** - *lbs*)	**LOADERS**					
FRONT LADEN	**46500** *102533*	**50500** *111353*	**54500** *120173*	**58500** *128993*	**62500** *137813*	**65000** *143325*
REAR UNLADEN	**37200** *82026*	**40400** *89082*	**43600** *96138*	**46800** *103194*	**50000** *110250*	**52000** *114660*

COMMERCIAL DESCRIPTION	CAI *MSPN*	Max. dist./ hour **km** *mile*	TKPH [1] *TMPH*	e **mm** *inch*	D **mm** *inch*	R' **mm** *inch*	RC **mm** *inch*	Tread depth **mm** *32rd*	Dual Spacing **mm** *inch*	Cap. **liter** *gallon*	Measuring [2] [3] Recommended Rim	Other Approved [2] [3] Rims
XMINE D2 SR L5R ** **50/65 R 51 Tubeless**	**970863** *92514*	**6** *3.7*		**1273** *50.1*	**3073** *121*	**1366** *53.8*	**9227** *363.3*	**116** *146.1*		**4463** *1179.1*	**40.00/4.5**	

Bar *Psi*	**4** *58*	**4.5** *65*	**5** *73*	**5.5** *80*	**6** *87*	**6.35** *92*
Machine - Use (**kg** - *lbs*)	**LOADERS**					
FRONT LADEN	**46500** *102533*	**50500** *111353*	**54500** *120173*	**58500** *128993*	**62500** *137813*	**65000** *143325*
REAR UNLADEN	**37200** *82026*	**40400** *89082*	**43600** *96138*	**46800** *103194*	**50000** *110250*	**52000** *114660*

57"

COMMERCIAL DESCRIPTION	CAI *MSPN*	Max. dist./ hour **km** *mile*	TKPH [1] *TMPH*	e **mm** *inch*	D **mm** *inch*	R' **mm** *inch*	RC **mm** *inch*	Tread depth **mm** *32rd*	Dual Spacing **mm** *inch*	Cap. **liter** *gallon*	Measuring [2] [3] Recommended Rim	Other Approved [2] [3] Rims
XDM B4 E4T ** **37.00 R 57 Tubeless**	**725325** *16047*	**20** *12.4*	**848** *581*	**1022** *40.2*	**3453** *135.9*	**1542** *60.7*	**10385** *408.9*	**99** *124.7*	**1242** *48.9*		**27.00/6.0 [5.2]**	27.00/6.0 [4.6] 29.00/6.0

Bar *Psi*	**4** *58*	**4.5** *65*	**5** *73*	**5.5** *80*	**6** *87*	**6.5** *94*	**7** *102*	**7.5** *109*
Machine - Use (**kg** - *lbs*)	**TRANSPORT**							
STANDARD	**38550** *85003*	**42200** *93051*	**45800** *100989*	**49400** *108927*	**53000** *116865*	**54850** *120944*	**56650** *124913*	**58450** *128882*

TIRE LOAD IN KG/LB – TIRE PRESSURE IN BAR/PSI

COMMERCIAL DESCRIPTION	CAI *MSPN*	Max. dist./ hour **km** *mile*	**TKPH** [1] *TMPH*	e **mm** *inch*	D **mm** *inch*	R' **mm** *inch*	RC **mm** *inch*	Tread depth **mm** *32rd*	Dual Spacing **mm** *inch*	Cap. **liter** *gallon*	Measuring [2] [3] Recommended Rim	Other Approved [2] [3] Rims
XDR3 C E4R ** **37.00 R 57 Tubeless** [8]	**168876** *09655*	**30** *18.6*	**1272** *871*	**1013** *39.9*	**3459** *136.2*	**1537** *60.5*	**10384** *408.8*	**102** *128.5*	**1242** *48.9*	**4530** *1196.8*	**27.00/6.0 [5.2]**	27.00/6.0 [4.6] 29.00/6.0
Bar *Psi*	**4** *58*	**4.5** *65*	**5** *73*	**5.5** *80*	**6** *87*	**6.5** *94*	**7** *102*	**7.5** *109*				
Machine - Use (**kg** - *lbs*)	**TRANSPORT**											
STANDARD	**38550** *85003*	**42200** *93051*	**45800** *100989*	**49400** *108927*	**53000** *116865*	**54850** *120944*	**56650** *124913*	**58450** *128882*				

COMMERCIAL DESCRIPTION	CAI *MSPN*	Max. dist./ hour **km** *mile*	**TKPH** [1] *TMPH*	e **mm** *inch*	D **mm** *inch*	R' **mm** *inch*	RC **mm** *inch*	Tread depth **mm** *32rd*	Dual Spacing **mm** *inch*	Cap. **liter** *gallon*	Measuring [2] [3] Recommended Rim	Other Approved [2] [3] Rims
XDR3 C4 E4R ** **37.00 R 57 Tubeless** [8]	**514466** *86430*	**27** *16.8*	**1145** *784*	**1013** *39.9*	**3459** *136.2*	**1537** *60.5*	**10384** *408.8*	**102** *128.5*	**1242** *48.9*	**4530** *1196.8*	**27.00/6.0 [5.2]**	27.00/6.0 [4.6] 29.00/6.0
Bar *Psi*	**4** *58*	**4.5** *65*	**5** *73*	**5.5** *80*	**6** *87*	**6.5** *94*	**7** *102*	**7.5** *109*				
Machine - Use (**kg** - *lbs*)	**TRANSPORT**											
STANDARD	**38550** *85003*	**42200** *93051*	**45800** *100989*	**49400** *108927*	**53000** *116865*	**54850** *120944*	**56650** *124913*	**58450** *128882*				

COMMERCIAL DESCRIPTION	CAI *MSPN*	Max. dist./ hour **km** *mile*	**TKPH** [1] *TMPH*	e **mm** *inch*	D **mm** *inch*	R' **mm** *inch*	RC **mm** *inch*	Tread depth **mm** *32rd*	Dual Spacing **mm** *inch*	Cap. **liter** *gallon*	Measuring [2] [3] Recommended Rim	Other Approved [2] [3] Rims
XDR3 B E4R ** **37.00 R 57 Tubeless** [8]	**651752** *18283*	**24** *14.9*	**1018** *697*	**1013** *39.9*	**3459** *136.2*	**1537** *60.5*	**10384** *408.8*	**102** *128.5*	**1242** *48.9*	**4530** *1196.8*	**27.00/6.0 [5.2]**	27.00/6.0 [4.6] 29.00/6.0
Bar *Psi*	**4** *58*	**4.5** *65*	**5** *73*	**5.5** *80*	**6** *87*	**6.5** *94*	**7** *102*	**7.5** *109*				
Machine - Use (**kg** - *lbs*)	**TRANSPORT**											
STANDARD	**38550** *85003*	**42200** *93051*	**45800** *100989*	**49400** *108927*	**53000** *116865*	**54850** *120944*	**56650** *124913*	**58450** *128882*				

COMMERCIAL DESCRIPTION	CAI *MSPN*	Max. dist./ hour **km** *mile*	**TKPH** [1] *TMPH*	e **mm** *inch*	D **mm** *inch*	R' **mm** *inch*	RC **mm** *inch*	Tread depth **mm** *32rd*	Dual Spacing **mm** *inch*	Cap. **liter** *gallon*	Measuring [2] [3] Recommended Rim	Other Approved [2] [3] Rims
XDR3 B4 E4R ** **37.00 R 57 Tubeless** [8]	**112553** *66263*	**20** *12.4*	**848** *581*	**1013** *39.9*	**3459** *136.2*	**1537** *60.5*	**10384** *408.8*	**102** *128.5*	**1242** *48.9*	**4530** *1196.8*	**27.00/6.0 [5.2]**	27.00/6.0 [4.6] 29.00/6.0
Bar *Psi*	**4** *58*	**4.5** *65*	**5** *73*	**5.5** *80*	**6** *87*	**6.5** *94*	**7** *102*	**7.5** *109*				
Machine - Use (**kg** - *lbs*)	**TRANSPORT**											
STANDARD	**38550** *85003*	**42200** *93051*	**45800** *100989*	**49400** *108927*	**53000** *116865*	**54850** *120944*	**56650** *124913*	**58450** *128882*				

COMMERCIAL DESCRIPTION	CAI *MSPN*	Max. dist./ hour **km** *mile*	**TKPH** [1] *TMPH*	e **mm** *inch*	D **mm** *inch*	R' **mm** *inch*	RC **mm** *inch*	Tread depth **mm** *32rd*	Dual Spacing **mm** *inch*	Cap. **liter** *gallon*	Measuring [2] [3] Recommended Rim	Other Approved [2] [3] Rims
XDC C4 E3V ** **40.00 R 57 Tubeless** [9]	**835698** *51763*	**40** *24.9*	**1920** *1315*	**1107** *43.6*	**3491** *137.4*	**1528** *60.2*	**10422** *410.3*	**63** *79.4*	**1365** *53.7*	**5628** *1486.9*	**29.00/6.0 [5.7]**	29.00/6.0 [5.2] 32.00/6.0
Bar *Psi*	**4** *58*	**4.5** *65*	**5** *73*	**5.5** *80*	**6** *87*	**6.5** *94*	**7** *102*					
Machine - Use (**kg** - *lbs*)	**TRANSPORT**											
STANDARD	**43650** *96248*	**47750** *105289*	**51850** *114329*	**55950** *123370*	**60000** *132300*	**62050** *136820*	**64100** *141341*					

COMMERCIAL DESCRIPTION	CAI *MSPN*	Max. dist./ hour **km** *mile*	**TKPH** [1] *TMPH*	e **mm** *inch*	D **mm** *inch*	R' **mm** *inch*	RC **mm** *inch*	Tread depth **mm** *32rd*	Dual Spacing **mm** *inch*	Cap. **liter** *gallon*	Measuring [2] [3] Recommended Rim	Other Approved [2] [3] Rims
XDC B E3V ** **40.00 R 57 Tubeless**	**731362** *87933*	**37** *23*	**1776** *1217*	**1107** *43.6*	**3491** *137.4*	**1528** *60.2*	**10422** *410.3*	**63** *79.4*	**1365** *53.7*	**5628** *1486.9*	**29.00/6.0 [5.7]**	29.00/6.0 [5.2] 32.00/6.0
Bar *Psi*	**4** *58*	**4.5** *65*	**5** *73*	**5.5** *80*	**6** *87*	**6.5** *94*	**7** *102*					
Machine - Use (**kg** - *lbs*)	**TRANSPORT**											
STANDARD	**43650** *96248*	**47750** *105289*	**51850** *114329*	**55950** *123370*	**60000** *132300*	**62050** *136820*	**64100** *141341*					

TIRE LOAD IN KG/LB – TIRE PRESSURE IN BAR/PSI

COMMERCIAL DESCRIPTION	CAI *MSPN*	Max. dist./ hour **km** *mile*	TKPH [1] *TMPH*	e **mm** *inch*	D **mm** *inch*	R' **mm** *inch*	RC **mm** *inch*	Tread depth **mm** *32rd*	Dual Spacing **mm** *inch*	Cap. **liter** *gallon*	Measuring [2] [3] Recommended Rim	Other Approved [2] [3] Rims
XDC B4 E3V ** 40.00 R 57 Tubeless [9]	**943864** *72766*	**34** *21.1*	**1632** *1118*	**1107** *43.6*	**3491** *137.4*	**1528** *60.2*	**10422** *410.3*	**63** *79.4*	**1365** *53.7*	**5628** *1486.9*	**29.00/6.0 [5.7]**	29.00/6.0 [5.2] 32.00/6.0
Bar	**4**	**4.5**	**5**	**5.5**	**6**	**6.5**	**7**					
Psi	*58*	*65*	*73*	*80*	*87*	*94*	*102*					
Machine - Use (**kg** - *lbs*)	**TRANSPORT**											
STANDARD	**43650** *96248*	**47750** *105289*	**51850** *114329*	**55950** *123370*	**60000** *132300*	**62050** *136820*	**64100** *141341*					

COMMERCIAL DESCRIPTION	CAI *MSPN*	Max. dist./ hour **km** *mile*	TKPH [1] *TMPH*	e **mm** *inch*	D **mm** *inch*	R' **mm** *inch*	RC **mm** *inch*	Tread depth **mm** *32rd*	Dual Spacing **mm** *inch*	Cap. **liter** *gallon*	Measuring [2] [3] Recommended Rim	Other Approved [2] [3] Rims
XDR3 MC E4R ** 40.00 R 57 Tubeless	**861130** *02582*	**30** *18.6*	**1440** *986*	**1127** *44.4*	**3580** *140.9*	**1578** *62.1*	**10714** *421.8*	**98** *123.5*	**1365** *53.7*	**5560** *1469*	**29.00/6.0 [5.7]**	29.00/6.0 [5.2] 32.00/6.0
Bar	**4.5**	**5**	**5.5**	**6**	**6.25**	**6.5**	**6.75**	**7**	**7.25**			
Psi	*65*	*73*	*80*	*87*	*91*	*94*	*98*	*102*	*105*			
Machine - Use (**kg** - *lbs*)	**TRANSPORT**											
STANDARD	**47750** *105289*	**51850** *114329*	**55950** *123370*	**60000** *132300*	**61400** *135387*	**62800** *138474*	**64200** *141561*	**65600** *144648*	**67000** *147735*			

COMMERCIAL DESCRIPTION	CAI *MSPN*	Max. dist./ hour **km** *mile*	TKPH [1] *TMPH*	e **mm** *inch*	D **mm** *inch*	R' **mm** *inch*	RC **mm** *inch*	Tread depth **mm** *32rd*	Dual Spacing **mm** *inch*	Cap. **liter** *gallon*	Measuring [2] [3] Recommended Rim	Other Approved [2] [3] Rims
XDR3 MC4 E4R ** 40.00 R 57 Tubeless	**843163** *54268*	**27** *16.8*	**1296** *888*	**1127** *44.4*	**3580** *140.9*	**1578** *62.1*	**10714** *421.8*	**98** *123.5*	**1365** *53.7*	**5560** *1469*	**29.00/6.0 [5.7]**	29.00/6.0 [5.2] 32.00/6.0
Bar	**4.5**	**5**	**5.5**	**6**	**6.25**	**6.5**	**6.75**	**7**	**7.25**			
Psi	*65*	*73*	*80*	*87*	*91*	*94*	*98*	*102*	*105*			
Machine - Use (**kg** - *lbs*)	**TRANSPORT**											
STANDARD	**47750** *105289*	**51850** *114329*	**55950** *123370*	**60000** *132300*	**61400** *135387*	**62800** *138474*	**64200** *141561*	**65600** *144648*	**67000** *147735*			

COMMERCIAL DESCRIPTION	CAI *MSPN*	Max. dist./ hour **km** *mile*	TKPH [1] *TMPH*	e **mm** *inch*	D **mm** *inch*	R' **mm** *inch*	RC **mm** *inch*	Tread depth **mm** *32rd*	Dual Spacing **mm** *inch*	Cap. **liter** *gallon*	Measuring [2] [3] Recommended Rim	Other Approved [2] [3] Rims
XDR3 MB E4R ** 40.00 R 57 Tubeless	**349567** *40866*	**24** *14.9*	**1152** *789*	**1127** *44.4*	**3580** *140.9*	**1578** *62.1*	**10714** *421.8*	**98** *123.5*	**1365** *53.7*	**5560** *1469*	**29.00/6.0 [5.7]**	29.00/6.0 [5.2] 32.00/6.0
Bar	**4**	**4.5**	**5**	**5.5**	**6**	**6.5**	**7**					
Psi	*58*	*65*	*73*	*80*	*87*	*94*	*102*					
Machine - Use (**kg** - *lbs*)	**TRANSPORT**											
STANDARD	**43650** *96248*	**47750** *105289*	**51850** *114329*	**55950** *123370*	**60000** *132300*	**62050** *136820*	**64100** *141341*					

COMMERCIAL DESCRIPTION	CAI *MSPN*	Max. dist./ hour **km** *mile*	TKPH [1] *TMPH*	e **mm** *inch*	D **mm** *inch*	R' **mm** *inch*	RC **mm** *inch*	Tread depth **mm** *32rd*	Dual Spacing **mm** *inch*	Cap. **liter** *gallon*	Measuring [2] [3] Recommended Rim	Other Approved [2] [3] Rims
XDR3 MB4 E4R ** 40.00 R 57 Tubeless	**133439** *07678*	**20** *12.4*	**960** *658*	**1127** *44.4*	**3580** *140.9*	**1578** *62.1*	**10714** *421.8*	**98** *123.5*	**1365** *53.7*	**5560** *1469*	**29.00/6.0 [5.7]**	29.00/6.0 [5.2] 32.00/6.0
Bar	**4**	**4.5**	**5**	**5.5**	**6**	**6.5**	**7**					
Psi	*58*	*65*	*73*	*80*	*87*	*94*	*102*					
Machine - Use (**kg** - *lbs*)	**TRANSPORT**											
STANDARD	**43650** *96248*	**47750** *105289*	**51850** *114329*	**55950** *123370*	**60000** *132300*	**62050** *136820*	**64100** *141341*					

COMMERCIAL DESCRIPTION	CAI *MSPN*	Max. dist./ hour **km** *mile*	TKPH [1] *TMPH*	e **mm** *inch*	D **mm** *inch*	R' **mm** *inch*	RC **mm** *inch*	Tread depth **mm** *32rd*	Dual Spacing **mm** *inch*	Cap. **liter** *gallon*	Measuring [2] [3] Recommended Rim	Other Approved [2] [3] Rims
XDR3 + MB E4R ** 40.00 R 57 Tubeless	**932077** *21579*	**24** *14.9*	**1152** *789*	**1127** *44.4*	**3580** *140.9*	**1578** *62.1*	**10714** *421.8*	**98** *123.5*	**1365** *53.7*	**5560** *1469*	**29.00/6.0 [5.7]**	29.00/6.0 [5.2] 32.00/6.0
Bar	**4.5**	**5**	**5.5**	**6**	**6.25**	**6.5**	**6.75**	**7**	**7.25**			
Psi	*65*	*73*	*80*	*87*	*91*	*94*	*98*	*102*	*105*			
Machine - Use (**kg** - *lbs*)	**TRANSPORT**											
STANDARD	**47750** *105289*	**51850** *114329*	**55950** *123370*	**60000** *132300*	**61400** *135387*	**62800** *138474*	**64200** *141561*	**65600** *144648*	**67000** *147735*			

TIRE LOAD IN KG/LB – TIRE PRESSURE IN BAR/PSI

COMMERCIAL DESCRIPTION	CAI *MSPN*	Max. dist./ hour **km** *mile*	TKPH [1] *TMPH*	e **mm** *inch*	D **mm** *inch*	R' **mm** *inch*	RC **mm** *inch*	Tread depth **mm** *32rd*	Dual Spacing **mm** *inch*	Cap. **liter** *gallon*	Measuring [2] [3] Recommended Rim	Other Approved [2] [3] Rims
XDR3 + MB4 E4R ** **40.00 R 57 Tubeless**	**151477** *21579*	**20** *12.4*	**960** *658*	**1127** *44.4*	**3580** *140.9*	**1578** *62.1*	**10714** *421.8*	**98** *123.5*	**1365** *53.7*	**5560** *1469*	**29.00/6.0 [5.7]**	29.00/6.0 [5.2] 32.00/6.0
Bar *Psi*	**4.5** *65*	**5** *73*	**5.5** *80*	**6** *87*	**6.25** *91*	**6.5** *94*	**6.75** *98*	**7** *102*	**7.25** *105*			
Machine - Use (**kg** - *lbs*)	**TRANSPORT**											
STANDARD	**47750** *105289*	**51850** *114329*	**55950** *123370*	**60000** *132300*	**61400** *135387*	**62800** *138474*	**64200** *141561*	**65600** *144648*	**67000** *147735*			

COMMERCIAL DESCRIPTION	CAI *MSPN*	Max. dist./ hour **km** *mile*	TKPH [1] *TMPH*	e **mm** *inch*	D **mm** *inch*	R' **mm** *inch*	RC **mm** *inch*	Tread depth **mm** *32rd*	Dual Spacing **mm** *inch*	Cap. **liter** *gallon*	Measuring [2] [3] Recommended Rim	Other Approved [2] [3] Rims
XDR250 C E4R ** **50/80 R 57 Tubeless**	**195241** *81178*	**30** *18.6*	**1608** *1101*	**1204** *47.4*	**3610** *142.1*	**1586** *62.4*	**10791** *424.8*	**94** *118.4*	**1420** *55.9*	**6150** *1624.8*	**32.00/6.0 [5.2]**	29.00/6.0 [5.2] 29.00/6.0 [5.7] 32.00/6.0 [4.8]
Bar *Psi*	**5** *73*	**5.25** *76*	**5.5** *80*	**5.75** *83*	**6** *87*	**6.25** *91*	**6.5** *94*	**6.75** *98*	**7** *102*			
Machine - Use (**kg** - *lbs*)	**TRANSPORT**											
STANDARD	**57000** *125685*	**59000** *130095*	**61000** *134505*	**63000** *138915*	**65000** *143325*	**67000** *147735*	**69000** *152145*	**71000** *156555*	**73000** *160965*			

COMMERCIAL DESCRIPTION	CAI *MSPN*	Max. dist./ hour **km** *mile*	TKPH [1] *TMPH*	e **mm** *inch*	D **mm** *inch*	R' **mm** *inch*	RC **mm** *inch*	Tread depth **mm** *32rd*	Dual Spacing **mm** *inch*	Cap. **liter** *gallon*	Measuring [2] [3] Recommended Rim	Other Approved [2] [3] Rims
XDR250 C4 E4R ** **50/80 R 57 Tubeless**	**253293** *48751*	**27** *16.8*	**1447** *991*	**1204** *47.4*	**3610** *142.1*	**1586** *62.4*	**10791** *424.8*	**94** *118.4*	**1420** *55.9*	**6150** *1624.8*	**32.00/6.0 [5.2]**	29.00/6.0 [5.2] 29.00/6.0 [5.7] 32.00/6.0 [4.8]
Bar *Psi*	**5** *73*	**5.25** *76*	**5.5** *80*	**5.75** *83*	**6** *87*	**6.25** *91*	**6.5** *94*	**6.75** *98*	**7** *102*			
Machine - Use (**kg** - *lbs*)	**TRANSPORT**											
STANDARD	**57000** *125685*	**59000** *130095*	**61000** *134505*	**63000** *138915*	**65000** *143325*	**67000** *147735*	**69000** *152145*	**71000** *156555*	**73000** *160965*			

COMMERCIAL DESCRIPTION	CAI *MSPN*	Max. dist./ hour **km** *mile*	TKPH [1] *TMPH*	e **mm** *inch*	D **mm** *inch*	R' **mm** *inch*	RC **mm** *inch*	Tread depth **mm** *32rd*	Dual Spacing **mm** *inch*	Cap. **liter** *gallon*	Measuring [2] [3] Recommended Rim	Other Approved [2] [3] Rims
XDR250 B E4R ** **50/80 R 57 Tubeless**	**274589** *50281*	**24** *14.9*	**1286** *881*	**1204** *47.4*	**3610** *142.1*	**1586** *62.4*	**10791** *424.8*	**94** *118.4*	**1420** *55.9*	**6150** *1624.8*	**32.00/6.0 [5.2]**	29.00/6.0 [5.2] 29.00/6.0 [5.7] 32.00/6.0 [4.8]
Bar *Psi*	**5** *73*	**5.5** *80*	**6** *87*	**6.5** *94*	**7** *102*	**7.5** *109*	**8** *116*					
Machine - Use (**kg** - *lbs*)	**TRANSPORT**											
STANDARD	**55000** *121275*	**59000** *130095*	**63000** *138915*	**67000** *147735*	**69000** *152145*	**71000** *156555*	**73000** *160965*					

COMMERCIAL DESCRIPTION	CAI *MSPN*	Max. dist./ hour **km** *mile*	TKPH [1] *TMPH*	e **mm** *inch*	D **mm** *inch*	R' **mm** *inch*	RC **mm** *inch*	Tread depth **mm** *32rd*	Dual Spacing **mm** *inch*	Cap. **liter** *gallon*	Measuring [2] [3] Recommended Rim	Other Approved [2] [3] Rims
XDR250 B4 E4R ** **50/80 R 57 Tubeless**	**371742** *50070*	**20** *12.4*	**1072** *734*	**1204** *47.4*	**3610** *142.1*	**1586** *62.4*	**10791** *424.8*	**94** *118.4*	**1420** *55.9*	**6150** *1624.8*	**32.00/6.0 [5.2]**	29.00/6.0 [5.2] 29.00/6.0 [5.7] 32.00/6.0 [4.8]
Bar *Psi*	**5** *73*	**5.5** *80*	**6** *87*	**6.5** *94*	**7** *102*	**7.5** *109*	**8** *116*					
Machine - Use (**kg** - *lbs*)	**TRANSPORT**											
STANDARD	**55000** *121275*	**59000** *130095*	**63000** *138915*	**67000** *147735*	**69000** *152145*	**71000** *156555*	**73000** *160965*					

COMMERCIAL DESCRIPTION	CAI *MSPN*	Max. dist./ hour **km** *mile*	TKPH [1] *TMPH*	e **mm** *inch*	D **mm** *inch*	R' **mm** *inch*	RC **mm** *inch*	Tread depth **mm** *32rd*	Dual Spacing **mm** *inch*	Cap. **liter** *gallon*	Measuring [2] [3] Recommended Rim	Other Approved [2] [3] Rims
XDR250+ MB E4R ** **50/80 R 57 Tubeless**	**264071** *21579*	**24** *14.9*	**1286** *881*	**1204** *47.4*	**3610** *142.1*	**1579** *62.2*	**10773** *424.1*	**94** *118.4*	**1420** *55.9*	**6150** *1624.8*	**32.00/6.0 [5.2]**	29.00/6.0 [5.2] 29.00/6.0 [5.7] 32.00/6.0 [4.8]
Bar *Psi*	**5** *73*	**5.25** *76*	**5.5** *80*	**5.75** *83*	**6** *87*	**6.25** *91*	**6.5** *94*	**6.75** *98*	**7** *102*			
Machine - Use (**kg** - *lbs*)	**TRANSPORT**											
STANDARD	**57000** *125685*	**59000** *130095*	**61000** *134505*	**63000** *138915*	**65000** *143325*	**67000** *147735*	**69000** *152145*	**71000** *156555*	**73000** *160965*			

TIRE LOAD IN KG/LB – TIRE PRESSURE IN BAR/PSI

COMMERCIAL DESCRIPTION	CAI *MSPN*	Max. dist./ hour **km** *mile*	TKPH [1] *TMPH*	e **mm** *inch*	D **mm** *inch*	R' **mm** *inch*	RC **mm** *inch*	Tread depth **mm** *32rd*	Dual Spacing **mm** *inch*	Cap. **liter** *gallon*	Measuring [2] [3] Recommended Rim	Other Approved [2] [3] Rims
XDR250+ MB4 E4R ** 50/80 R 57 Tubeless	**238454** *21579*	**20** *12.4*	**1072** *734*	**1204** *47.4*	**3610** *142.1*	**1579** *62.2*	**10773** *424.1*	**94** *118.4*	**1420** *55.9*	**6150** *1624.8*	**32.00/6.0 [5.2]**	29.00/6.0 [5.2] 29.00/6.0 [5.7] 32.00/6.0 [4.8]
Bar *Psi*	**5** *73*	**5.25** *76*	**5.5** *80*	**5.75** *83*	**6** *87*	**6.25** *91*	**6.5** *94*	**6.75** *98*	**7** *102*			
Machine - Use (**kg** - *lbs*)	**TRANSPORT**											
STANDARD	**57000** *125685*	**59000** *130095*	**61000** *134505*	**63000** *138915*	**65000** *143325*	**67000** *147735*	**69000** *152145*	**71000** *156555*	**73000** *160965*			

COMMERCIAL DESCRIPTION	CAI *MSPN*	Max. dist./ hour **km** *mile*	TKPH [1] *TMPH*	e **mm** *inch*	D **mm** *inch*	R' **mm** *inch*	RC **mm** *inch*	Tread depth **mm** *32rd*	Dual Spacing **mm** *inch*	Cap. **liter** *gallon*	Measuring [2] [3] Recommended Rim	Other Approved [2] [3] Rims
XDR4 SPEED+ MD E4R ** 50/80 R 57 Tubeless	**841338** *14855*	**34** *21.1*	**1822** *1248*	**1197** *47.1*	**3607** *142*	**1582** *62.3*	**10776** *424.3*	**85** *107.1*	**1420** *55.9*	**6350** *1677.7*	**32.00/6.0 [5.2]**	29.00/6.0 [5.2] 29.00/6.0 [5.7] 32.00/6.0 [4.8]
Bar *Psi*	**5** *73*	**5.25** *76*	**5.5** *80*	**5.75** *83*	**6** *87*	**6.25** *91*	**6.5** *94*	**6.75** *98*	**7** *102*			
Machine - Use (**kg** - *lbs*)	**TRANSPORT**											
STANDARD	**57000** *125685*	**59000** *130095*	**61000** *134505*	**63000** *138915*	**65000** *143325*	**67000** *147735*	**69000** *152145*	**71000** *156555*	**73000** *160965*			

COMMERCIAL DESCRIPTION	CAI *MSPN*	Max. dist./ hour **km** *mile*	TKPH [1] *TMPH*	e **mm** *inch*	D **mm** *inch*	R' **mm** *inch*	RC **mm** *inch*	Tread depth **mm** *32rd*	Dual Spacing **mm** *inch*	Cap. **liter** *gallon*	Measuring [2] [3] Recommended Rim	Other Approved [2] [3] Rims
XDR4 SPEED MC E4R ** 50/80 R 57 Tubeless	**398033** *68251*	**30** *18.6*	**1608** *1101*	**1197** *47.1*	**3607** *142*	**1582** *62.3*	**10776** *424.3*	**85** *107.1*	**1420** *55.9*	**6350** *1677.7*	**32.00/6.0 [5.2]**	29.00/6.0 [5.2] 29.00/6.0 [5.7] 32.00/6.0 [4.8]
Bar *Psi*	**5** *73*	**5.25** *76*	**5.5** *80*	**5.75** *83*	**6** *87*	**6.25** *91*	**6.5** *94*	**6.75** *98*	**7** *102*			
Machine - Use (**kg** - *lbs*)	**TRANSPORT**											
STANDARD	**57000** *125685*	**59000** *130095*	**61000** *134505*	**63000** *138915*	**65000** *143325*	**67000** *147735*	**69000** *152145*	**71000** *156555*	**73000** *160965*			

COMMERCIAL DESCRIPTION	CAI *MSPN*	Max. dist./ hour **km** *mile*	TKPH [1] *TMPH*	e **mm** *inch*	D **mm** *inch*	R' **mm** *inch*	RC **mm** *inch*	Tread depth **mm** *32rd*	Dual Spacing **mm** *inch*	Cap. **liter** *gallon*	Measuring [2] [3] Recommended Rim	Other Approved [2] [3] Rims
XMINE D2 LC L5R * 55/80 R 57 Tubeless	**594400** *13267*	**10** *6.2*		**1430** *56.3*	**3740** *147.2*	**1636** *64.4*	**11161** *439.4*	**119** *149.9*		**7967** *2104.9*	**44.00/5.0**	42.00/5.0
Bar *Psi*	**4** *58*	**4.5** *65*	**5** *73*	**5.5** *80*	**6** *87*	**6.5** *94*	**7** *102*					
Machine - Use (**kg** - *lbs*)	**LOADERS**											
FRONT LADEN	**75000** *165375*	**80000** *176400*	**85000** *187425*	**90000** *198450*	**95000** *209475*	**100000** *220500*	**105000** *231525*					
REAR UNLADEN	**60000** *132300*	**64000** *141120*	**68000** *149940*	**72000** *158760*	**76000** *167580*	**80000** *176400*	**84000** *185220*					

COMMERCIAL DESCRIPTION	CAI *MSPN*	Max. dist./ hour **km** *mile*	TKPH [1] *TMPH*	e **mm** *inch*	D **mm** *inch*	R' **mm** *inch*	RC **mm** *inch*	Tread depth **mm** *32rd*	Dual Spacing **mm** *inch*	Cap. **liter** *gallon*	Measuring [2] [3] Recommended Rim	Other Approved [2] [3] Rims
XMINE D2 SR L5R * 55/80 R 57 Tubeless	**635563** *18939*	**6** *3.7*		**1430** *56.3*	**3740** *147.2*	**1636** *64.4*	**11161** *439.4*	**119** *149.9*		**7967** *2104.9*	**44.00/5.0**	42.00/5.0
Bar *Psi*	**4** *58*	**4.5** *65*	**5** *73*	**5.5** *80*	**6** *87*	**6.5** *94*	**7** *102*					
Machine - Use (**kg** - *lbs*)	**LOADERS**											
FRONT LADEN	**75000** *165375*	**80000** *176400*	**85000** *187425*	**90000** *198450*	**95000** *209475*	**100000** *220500*	**105000** *231525*					
REAR UNLADEN	**60000** *132300*	**64000** *141120*	**68000** *149940*	**72000** *158760*	**76000** *167580*	**80000** *176400*	**84000** *185220*					

TIRE LOAD IN KG/LB – TIRE PRESSURE IN BAR/PSI

COMMERCIAL DESCRIPTION	CAI *MSPN*	Max. dist./ hour **km** *mile*	TKPH [1] *TMPH*	e **mm** *inch*	D **mm** *inch*	R' **mm** *inch*	RC **mm** *inch*	Tread depth **mm** *32rd*	Dual Spacing **mm** *inch*	Cap. **liter** *gallon*	Measuring [2] [3] Recommended Rim	Other Approved [2] [3] Rims
XMINE D2 HR L5R * 55/80 R 57 Tubeless	**817367** *07695*	**6** *3.7*		**1430** *56.3*	**3740** *147.2*	**1636** *64.4*	**11161** *439.4*	**119** *149.9*		**7967** *2104.9*	**44.00/5.0**	42.00/5.0
Bar	**4**	**4.5**		**5**	**5.5**	**6**		**6.5**	**7**			
Psi	*58*	*65*		*73*	*80*	*87*		*94*	*102*			
Machine - Use (**kg** - *lbs*)	**LOADERS**											
FRONT LADEN	**75000** *165375*	**80000** *176400*		**85000** *187425*	**90000** *198450*	**95000** *209475*		**100000** *220500*	**105000** *231525*			
REAR UNLADEN	**60000** *132300*	**64000** *141120*		**68000** *149940*	**72000** *158760*	**76000** *167580*		**80000** *176400*	**84000** *185220*			

COMMERCIAL DESCRIPTION	CAI *MSPN*	Max. dist./ hour **km** *mile*	TKPH [1] *TMPH*	e **mm** *inch*	D **mm** *inch*	R' **mm** *inch*	RC **mm** *inch*	Tread depth **mm** *32rd*	Dual Spacing **mm** *inch*	Cap. **liter** *gallon*	Measuring [2] [3] Recommended Rim	Other Approved [2] [3] Rims
XDR3 MC4 E4R ** 50/90 R 57 Tubeless	**650162** *09945*	**28** *17.4*	**1747** *1197*	**1272** *50.1*	**3822** *150.5*	**1701** *67*	**11513** *453.3*	**98** *123.5*	**1506** *59.3*	**7520** *1986.8*	**32.00/6.5**	32.00/6.0 34.00/6.0 34.00/6.5
Bar	**4**	**4.5**		**5**	**5.5**	**6**		**6.5**	**7**	**7.5**		
Psi	*58*	*65*		*73*	*80*	*87*		*94*	*102*	*109*		
Machine - Use (**kg** - *lbs*)	**TRANSPORT**											
STANDARD	**57800** *127449*	**62750** *138364*		**67700** *149279*	**72650** *160193*	**75320** *166081*		**78000** *171990*	**80660** *177855*	**83320** *183721*		

COMMERCIAL DESCRIPTION	CAI *MSPN*	Max. dist./ hour **km** *mile*	TKPH [1] *TMPH*	e **mm** *inch*	D **mm** *inch*	R' **mm** *inch*	RC **mm** *inch*	Tread depth **mm** *32rd*	Dual Spacing **mm** *inch*	Cap. **liter** *gallon*	Measuring [2] [3] Recommended Rim	Other Approved [2] [3] Rims
XDR3 MB E4R ** 50/90 R 57 Tubeless	**744229** *45751*	**24** *14.9*	**1498** *1026*	**1272** *50.1*	**3822** *150.5*	**1701** *67*	**11513** *453.3*	**98** *123.5*	**1506** *59.3*	**7520** *1986.8*	**32.00/6.5**	32.00/6.0 34.00/6.0 34.00/6.5
Bar	**4**	**4.5**		**5**	**5.5**	**6**		**6.5**	**7**	**7.5**		
Psi	*58*	*65*		*73*	*80*	*87*		*94*	*102*	*109*		
Machine - Use (**kg** - *lbs*)	**TRANSPORT**											
STANDARD	**57800** *127449*	**62750** *138364*		**67700** *149279*	**72650** *160193*	**75320** *166081*		**78000** *171990*	**80660** *177855*	**83320** *183721*		

COMMERCIAL DESCRIPTION	CAI *MSPN*	Max. dist./ hour **km** *mile*	TKPH [1] *TMPH*	e **mm** *inch*	D **mm** *inch*	R' **mm** *inch*	RC **mm** *inch*	Tread depth **mm** *32rd*	Dual Spacing **mm** *inch*	Cap. **liter** *gallon*	Measuring [2] [3] Recommended Rim	Other Approved [2] [3] Rims
XDR3 MB4 E4R ** 50/90 R 57 Tubeless	**283806** *39092*	**20** *12.4*	**1248** *855*	**1272** *50.1*	**3822** *150.5*	**1701** *67*	**11513** *453.3*	**98** *123.5*	**1506** *59.3*	**7520** *1986.8*	**32.00/6.5**	32.00/6.0 34.00/6.0 34.00/6.5
Bar	**4**	**4.5**		**5**	**5.5**	**6**		**6.5**	**7**	**7.5**		
Psi	*58*	*65*		*73*	*80*	*87*		*94*	*102*	*109*		
Machine - Use (**kg** - *lbs*)	**TRANSPORT**											
STANDARD	**57800** *127449*	**62750** *138364*		**67700** *149279*	**72650** *160193*	**75320** *166081*		**78000** *171990*	**80660** *177855*	**83320** *183721*		

COMMERCIAL DESCRIPTION	CAI *MSPN*	Max. dist./ hour **km** *mile*	TKPH [1] *TMPH*	e **mm** *inch*	D **mm** *inch*	R' **mm** *inch*	RC **mm** *inch*	Tread depth **mm** *32rd*	Dual Spacing **mm** *inch*	Cap. **liter** *gallon*	Measuring [2] [3] Recommended Rim	Other Approved [2] [3] Rims
XDR3 + MB E4R ** 50/90 R 57 Tubeless	**078316** *78907*	**24** *14.9*	**1498** *1026*	**1255** *49.4*	**3822** *150.5*	**1675** *65.9*	**11414** *449.4*	**98** *123.5*	**1506** *59.3*	**7520** *1986.8*	**32.00/6.5**	32.00/6.0 34.00/6.0 34.00/6.5
Bar	**4**	**4.5**		**5**	**5.5**	**6**		**6.5**	**7**	**7.5**		
Psi	*58*	*65*		*73*	*80*	*87*		*94*	*102*	*109*		
Machine - Use (**kg** - *lbs*)	**TRANSPORT**											
STANDARD	**57800** *127449*	**62750** *138364*		**67700** *149279*	**72650** *160193*	**75320** *166081*		**78000** *171990*	**80660** *177855*	**83320** *183721*		

COMMERCIAL DESCRIPTION	CAI *MSPN*	Max. dist./ hour **km** *mile*	TKPH [1] *TMPH*	e **mm** *inch*	D **mm** *inch*	R' **mm** *inch*	RC **mm** *inch*	Tread depth **mm** *32rd*	Dual Spacing **mm** *inch*	Cap. **liter** *gallon*	Measuring [2] [3] Recommended Rim	Other Approved [2] [3] Rims
XDR3 + MB4 E4R ** 50/90 R 57 Tubeless	**704562** *84040*	**20** *12.4*	**1248** *855*	**1255** *49.4*	**3822** *150.5*	**1675** *65.9*	**11414** *449.4*	**98** *123.5*	**1506** *59.3*	**7520** *1986.8*	**32.00/6.5**	32.00/6.0 34.00/6.0 34.00/6.5
Bar	**4**	**4.5**		**5**	**5.5**	**6**		**6.5**	**7**	**7.5**		
Psi	*58*	*65*		*73*	*80*	*87*		*94*	*102*	*109*		
Machine - Use (**kg** - *lbs*)	**TRANSPORT**											
STANDARD	**57800** *127449*	**62750** *138364*		**67700** *149279*	**72650** *160193*	**75320** *166081*		**78000** *171990*	**80660** *177855*	**83320** *183721*		

TIRE LOAD IN KG/LB – TIRE PRESSURE IN BAR/PSI

COMMERCIAL DESCRIPTION	CAI *MSPN*	Max. dist./ hour **km** *mile*	**TKPH** [1] *TMPH*	e **mm** *inch*	D **mm** *inch*	R' **mm** *inch*	RC **mm** *inch*	Tread depth **mm** *32rd*	Dual Spacing **mm** *inch*	Cap. **liter** *gallon*	Measuring [2] [3] Recommended Rim	Other Approved [2] [3] Rims
XMINE D2 SR L5R * 60/80 R 57 Tubeless	**964380** *31145*	**6** *3.7*		**1520** *59.8*	**3949** *155.5*	**1713** *67.4*	**11750** *462.6*	**118** *148.7*		**10022** *2647.8*	**47.00/5.0**	

Bar *Psi*	**4** *58*	**4.5** *65*	**5** *73*	**5.5** *80*	**6** *87*	**6.5** *94*	**7** *102*
Machine - Use (**kg** - *lbs*)	**LOADERS**						
FRONT LADEN	**75000** *165375*	**83000** *183015*	**91000** *200655*	**99000** *218295*	**107000** *235935*	**115000** *253575*	**123000** *271215*
REAR UNLADEN	**60000** *132300*	**66400** *146412*	**72800** *160524*	**79200** *174636*	**85600** *188748*	**92000** *202860*	**98400** *216972*

COMMERCIAL DESCRIPTION	CAI *MSPN*	Max. dist./ hour **km** *mile*	**TKPH** [1] *TMPH*	e **mm** *inch*	D **mm** *inch*	R' **mm** *inch*	RC **mm** *inch*	Tread depth **mm** *32rd*	Dual Spacing **mm** *inch*	Cap. **liter** *gallon*	Measuring [2] [3] Recommended Rim	Other Approved [2] [3] Rims
XMINE D2 HR L5R * 60/80 R 57 Tubeless	**114447** *09011*	**6** *3.7*		**1520** *59.8*	**3949** *155.5*	**1713** *67.4*	**11750** *462.6*	**118** *148.7*		**10022** *2647.8*	**47.00/5.0**	

Bar *Psi*	**4** *58*	**4.5** *65*	**5** *73*	**5.5** *80*	**6** *87*	**6.5** *94*	**7** *102*
Machine - Use (**kg** - *lbs*)	**LOADERS**						
FRONT LADEN	**75000** *165375*	**83000** *183015*	**91000** *200655*	**99000** *218295*	**107000** *235935*	**115000** *253575*	**123000** *271215*
REAR UNLADEN	**60000** *132300*	**66400** *146412*	**72800** *160524*	**79200** *174636*	**85600** *188748*	**92000** *202860*	**98400** *216972*

COMMERCIAL DESCRIPTION	CAI *MSPN*	Max. dist./ hour **km** *mile*	**TKPH** [1] *TMPH*	e **mm** *inch*	D **mm** *inch*	R' **mm** *inch*	RC **mm** *inch*	Tread depth **mm** *32rd*	Dual Spacing **mm** *inch*	Cap. **liter** *gallon*	Measuring [2] [3] Recommended Rim	Other Approved [2] [3] Rims
XMINE L-4 ** 70/70 R57	**684202** *-*	**7** *4.3*		**1845** *72.6*	**3983** *156.8*	**1703** *67*	**11789** *464.1*	**99** *124.7*		**13404** *3541.3*	**60.00/6.0**	

Bar *Psi*	**5** *73*	**5.25** *76*	**5.5** *80*	**5.75** *83*	**6** *87*	**6.25** *91*	**6.75** *98*
Machine - Use (**kg** - *lbs*)	**LOADERS**						
FRONT LADEN	**115000** *253575*	**118000** *260190*	**121000** *26805*	**125000** *275625*	**128500** *283343*	**132000** *291060*	**136000** *299880*
REAR UNLADEN	**92000** *202860*	**94400** *208152*	**96800** *213444*	**100000** *220500*	**102800** *226674*	**105600** *232848*	**108800** *239904*

63"

COMMERCIAL DESCRIPTION	CAI *MSPN*	Max. dist./ hour **km** *mile*	**TKPH** [1] *TMPH*	e **mm** *inch*	D **mm** *inch*	R' **mm** *inch*	RC **mm** *inch*	Tread depth **mm** *32rd*	Dual Spacing **mm** *inch*	Cap. **liter** *gallon*	Measuring [2] [3] Recommended Rim	Other Approved [2] [3] Rims
XDR3 MC E4R ** 53/80 R 63 Tubeless	**709804** *99718*	**30** *18.6*	**1980** *1356*	**1359** *53.5*	**3804** *149.8*	**1648** *64.9*	**11312** *445.4*	**110** *138.6*	**1637** *64.4*	**7590** *2005.3*	**36.00/5.0 [5.5]**	36.00/5.0 [5] 38.00/5.0 [5.5] 38.00/5.0 [5]

Bar *Psi*	**4.5** *65*	**5** *73*	**5.25** *76*	**5.5** *80*	**5.75** *83*	**6** *87*	**6.25** *91*	**6.5** *94*	**6.75** *98*	**7** *102*
Machine - Use (**kg** - *lbs*)	**TRANSPORT**									
STANDARD	**67000** *147735*	**71000** *156555*	**75000** *165375*	**77500** *170888*	**80000** *176400*	**82500** *181913*	**83750** *184669*	**85010** *187447*	**86820** *191438*	**88275** *194646*

COMMERCIAL DESCRIPTION	CAI *MSPN*	Max. dist./ hour **km** *mile*	**TKPH** [1] *TMPH*	e **mm** *inch*	D **mm** *inch*	R' **mm** *inch*	RC **mm** *inch*	Tread depth **mm** *32rd*	Dual Spacing **mm** *inch*	Cap. **liter** *gallon*	Measuring [2] [3] Recommended Rim	Other Approved [2] [3] Rims
XDR3 MC4 E4R ** 53/80 R 63 Tubeless	**031154** *06229*	**28** *17.4*	**1848** *1266*	**1359** *53.5*	**3804** *149.8*	**1648** *64.9*	**11312** *445.4*	**110** *138.6*	**1637** *64.4*	**7590** *2005.3*	**36.00/5.0 [5.5]**	36.00/5.0 [5] 38.00/5.0 [5.5] 38.00/5.0 [5]

Bar *Psi*	**4.5** *65*	**5** *73*	**5.25** *76*	**5.5** *80*	**5.75** *83*	**6** *87*	**6.25** *91*	**6.5** *94*	**6.75** *98*	**7** *102*
Machine - Use (**kg** - *lbs*)	**TRANSPORT**									
STANDARD	**67000** *147735*	**71000** *156555*	**75000** *165375*	**77500** *170888*	**80000** *176400*	**82500** *181913*	**83750** *184669*	**85010** *187447*	**86820** *191438*	**88275** *194646*

TIRE LOAD IN KG/LB – TIRE PRESSURE IN BAR/PSI

COMMERCIAL DESCRIPTION	CAI *MSPN*	Max. dist./ hour **km** *mile*	**TKPH** [1] *TMPH*	e **mm** *inch*	D **mm** *inch*	R' **mm** *inch*	RC **mm** *inch*	Tread depth **mm** *32rd*	Dual Spacing **mm** *inch*	Cap. **liter** *gallon*	Measuring [2] [3] Recommended Rim	Other Approved [2] [3] Rims
XDR3 MB E4R ** 53/80 R 63 Tubeless	**302446** *26004*	**24** *14.9*	**1584** *1085*	**1359** *53.5*	**3804** *149.8*	**1648** *64.9*	**11312** *445.4*	**110** *138.6*	**1637** *64.4*	**7590** *2005.3*	**36.00/5.0 [5.5]**	36.00/5.0 [5] 38.00/5.0 [5.5] 38.00/5.0 [5]
Bar *Psi*	**4.5** *65*	**5** *73*	**5.25** *76*	**5.5** *80*	**5.75** *83*	**6** *87*	**6.25** *91*	**6.5** *94*	**6.75** *98*	**7** *102*		
Machine - Use (**kg** - *lbs*)	**TRANSPORT**											
STANDARD	**67000** *147735*	**71000** *156555*	**75000** *165375*	**77500** *170888*	**80000** *176400*	**82500** *181913*	**83750** *184669*	**85010** *187447*	**86820** *191438*	**88275** *194646*		

COMMERCIAL DESCRIPTION	CAI *MSPN*	Max. dist./ hour **km** *mile*	**TKPH** [1] *TMPH*	e **mm** *inch*	D **mm** *inch*	R' **mm** *inch*	RC **mm** *inch*	Tread depth **mm** *32rd*	Dual Spacing **mm** *inch*	Cap. **liter** *gallon*	Measuring [2] [3] Recommended Rim	Other Approved [2] [3] Rims
XDR3 MB4 E4R ** 53/80 R 63 Tubeless	**176236** *05149*	**20** *12.4*	**1320** *904*	**1359** *53.5*	**3804** *149.8*	**1648** *64.9*	**11312** *445.4*	**110** *138.6*	**1637** *64.4*	**7590** *2005.3*	**36.00/5.0 [5.5]**	36.00/5.0 [5] 38.00/5.0 [5.5] 38.00/5.0 [5]
Bar *Psi*	**4.5** *65*	**5** *73*	**5.25** *76*	**5.5** *80*	**5.75** *83*	**6** *87*	**6.25** *91*	**6.5** *94*	**6.75** *98*	**7** *102*		
Machine - Use (**kg** - *lbs*)	**TRANSPORT**											
STANDARD	**67000** *147735*	**71000** *156555*	**75000** *165375*	**77500** *170888*	**80000** *176400*	**82500** *181913*	**83750** *184669*	**85010** *187447*	**86820** *191438*	**88275** *194646*		

COMMERCIAL DESCRIPTION	CAI *MSPN*	Max. dist./ hour **km** *mile*	**TKPH** [1] *TMPH*	e **mm** *inch*	D **mm** *inch*	R' **mm** *inch*	RC **mm** *inch*	Tread depth **mm** *32rd*	Dual Spacing **mm** *inch*	Cap. **liter** *gallon*	Measuring [2] [3] Recommended Rim	Other Approved [2] [3] Rims
XDR3 EXTRA LOAD MC E4R * 53/80 R 63 Tubeless**	**812927** *17699*	**30** *18.6*	**2280** *1562*	**1357** *53.4*	**3806** *149.8*	**1661** *65.4*	**11349** *446.8*	**110** *138.6*	**1637** *64.4*	**7590** *2005.3*	**36.00/5.0 [5.5]**	36.00/5.0 [5] 38.00/5.0 [5.5] 38.00/5.0 [5]
Bar *Psi*	**7** *102*	**7.25** *105*	**7.5** *109*									
Machine - Use (**kg** - *lbs*)	**TRANSPORT**											
STANDARD	**90000** *198450*	**92500** *203963*	**95000** *209475*									

COMMERCIAL DESCRIPTION	CAI *MSPN*	Max. dist./ hour **km** *mile*	**TKPH** [1] *TMPH*	e **mm** *inch*	D **mm** *inch*	R' **mm** *inch*	RC **mm** *inch*	Tread depth **mm** *32rd*	Dual Spacing **mm** *inch*	Cap. **liter** *gallon*	Measuring [2] [3] Recommended Rim	Other Approved [2] [3] Rims
XDR3 EXTRA LOAD MC4 E4R * 53/80 R 63 Tubeless**	**781925** *81977*	**28** *17.4*	**2128** *1458*	**1357** *53.4*	**3806** *149.8*	**1661** *65.4*	**11349** *446.8*	**110** *138.6*	**1637** *64.4*	**7590** *2005.3*	**36.00/5.0 [5.5]**	36.00/5.0 [5] 38.00/5.0 [5.5] 38.00/5.0 [5]
Bar *Psi*	**7** *102*	**7.25** *105*	**7.5** *109*									
Machine - Use (**kg** - *lbs*)	**TRANSPORT**											
STANDARD	**90000** *198450*	**92500** *203963*	**95000** *209475*									

COMMERCIAL DESCRIPTION	CAI *MSPN*	Max. dist./ hour **km** *mile*	**TKPH** [1] *TMPH*	e **mm** *inch*	D **mm** *inch*	R' **mm** *inch*	RC **mm** *inch*	Tread depth **mm** *32rd*	Dual Spacing **mm** *inch*	Cap. **liter** *gallon*	Measuring [2] [3] Recommended Rim	Other Approved [2] [3] Rims
XDR3 EXTRA LOAD MB E4R * 53/80 R 63 Tubeless**	**664323** *17762*	**24** *14.9*	**1824** *1249*	**1357** *53.4*	**3806** *149.8*	**1661** *65.4*	**11349** *446.8*	**110** *138.6*	**1637** *64.4*	**7590** *2005.3*	**36.00/5.0 [5.5]**	36.00/5.0 [5] 38.00/5.0 [5.5] 38.00/5.0 [5]
Bar *Psi*	**7** *102*	**7.25** *105*	**7.5** *109*									
Machine - Use (**kg** - *lbs*)	**TRANSPORT**											
STANDARD	**90000** *198450*	**92500** *203963*	**95000** *209475*									

COMMERCIAL DESCRIPTION	CAI *MSPN*	Max. dist./ hour **km** *mile*	**TKPH** [1] *TMPH*	e **mm** *inch*	D **mm** *inch*	R' **mm** *inch*	RC **mm** *inch*	Tread depth **mm** *32rd*	Dual Spacing **mm** *inch*	Cap. **liter** *gallon*	Measuring [2] [3] Recommended Rim	Other Approved [2] [3] Rims
XDR3 EXTRA LOAD MB4 E4R * 53/80 R 63 Tubeless**	**637745** *68989*	**20** *12.4*	**1520** *1041*	**1357** *53.4*	**3806** *149.8*	**1661** *65.4*	**11349** *446.8*	**110** *138.6*	**1637** *64.4*	**7590** *2005.3*	**36.00/5.0 [5.5]**	36.00/5.0 [5] 38.00/5.0 [5.5] 38.00/5.0 [5]
Bar *Psi*	**7** *102*	**7.25** *105*	**7.5** *109*									
Machine - Use (**kg** - *lbs*)	**TRANSPORT**											
STANDARD	**90000** *198450*	**92500** *203963*	**95000** *209475*									

TIRE LOAD IN KG/LB – TIRE PRESSURE IN BAR/PSI

COMMERCIAL DESCRIPTION	CAI *MSPN*	Max. dist./ hour **km** *mile*	TKPH [1] *TMPH*	e **mm** *inch*	D **mm** *inch*	R' **mm** *inch*	RC **mm** *inch*	Tread depth **mm** *32rd*	Dual Spacing **mm** *inch*	Cap. **liter** *gallon*	Measuring [2] [3] Recommended Rim	Other Approved [2] [3] Rims
XDR3+ MB4 E4R ** 53/80 R 63 Tubeless	**221719** *00582*	**20** *12.4*	**1320** *904*	**1359** *53.5*	**3804** *149.8*	**1648** *64.9*	**11312** *445.4*	**110** *138.6*	*1637* *64.4*	**7590** *2005.3*	**36.00/5.0 [5.5]**	36.00/5.0 [5] 38.00/5.0 [5.5] 38.00/5.0 [5]
Bar *Psi*	**4.5** *65*	**5** *73*	**5.25** *76*	**5.5** *80*	**5.75** *83*	**6** *87*	**6.25** *91*	**6.5** *94*	**6.75** *98*	**7** *102*		
Machine - Use (**kg** - *lbs*)	**TRANSPORT**											
STANDARD	**67000** *147735*	**71000** *156555*	**75000** *165375*	**77500** *170888*	**80000** *176400*	**82500** *181913*	**83750** *184669*	**85010** *187447*	**86820** *191438*	**88275** *194646*		

COMMERCIAL DESCRIPTION	CAI *MSPN*	Max. dist./ hour **km** *mile*	TKPH [1] *TMPH*	e **mm** *inch*	D **mm** *inch*	R' **mm** *inch*	RC **mm** *inch*	Tread depth **mm** *32rd*	Dual Spacing **mm** *inch*	Cap. **liter** *gallon*	Measuring [2] [3] Recommended Rim	Other Approved [2] [3] Rims
XDR3+ EXTRA LOAD MB4 E4R * 53/80 R 63 Tubeless**	**509797** *06252*	**20** *12.4*	**1520** *1041*	**1357** *53.4*	**3806** *149.8*	**1661** *65.4*	**11349** *446.8*	**110** *138.6*	*1637* *64.4*	**7590** *2005.3*	**36.00/5.0 [5.5]**	36.00/5.0 [5] 38.00/5.0 [5.5] 38.00/5.0 [5]
Bar *Psi*	**7** *102*	**7.25** *105*	**7.5** *109*									
Machine - Use (**kg** - *lbs*)	**TRANSPORT**											
STANDARD	**90000** *198450*	**92500** *203963*	**95000** *209475*									

COMMERCIAL DESCRIPTION	CAI *MSPN*	Max. dist./ hour **km** *mile*	TKPH [1] *TMPH*	e **mm** *inch*	D **mm** *inch*	R' **mm** *inch*	RC **mm** *inch*	Tread depth **mm** *32rd*	Dual Spacing **mm** *inch*	Cap. **liter** *gallon*	Measuring [2] [3] Recommended Rim	Other Approved [2] [3] Rims
XDR2 S C4 E3 ** 59/80 R 63 Tubeless	**416409** *68652*	**32** *19.9*	**2535** *1736*	**1495** *58.9*	**4029** *158.6*	**1734** *68.3*	**11954** *470.6*	**72** *90.7*	**1834** *72.2*	**10640** *2811.1*	**44.00/5.0 [6.0]**	44.00/5.0 [5.5]
Bar *Psi*	**6** *87*	**6.5** *94*	**6.8** *99*									
Machine - Use (**kg** - *lbs*)	**TRANSPORT**											
STANDARD	**100000** *220500*	**102100** *225131*	**104000** *229320*									

COMMERCIAL DESCRIPTION	CAI *MSPN*	Max. dist./ hour **km** *mile*	TKPH [1] *TMPH*	e **mm** *inch*	D **mm** *inch*	R' **mm** *inch*	RC **mm** *inch*	Tread depth **mm** *32rd*	Dual Spacing **mm** *inch*	Cap. **liter** *gallon*	Measuring [2] [3] Recommended Rim	Other Approved [2] [3] Rims
XDR2 S B E3 ** 59/80 R 63 Tubeless	**532463** *32399*	**28** *17.4*	**2218** *1519*	**1495** *58.9*	**4029** *158.6*	**1734** *68.3*	**11954** *470.6*	**72** *90.7*	**1834** *72.2*	**10640** *2811.1*	**44.00/5.0 [6.0]**	44.00/5.0 [5.5]
Bar *Psi*	**6** *87*	**6.5** *94*	**6.8** *99*									
Machine - Use (**kg** - *lbs*)	**TRANSPORT**											
STANDARD	**100000** *220500*	**102100** *225131*	**104000** *229320*									

COMMERCIAL DESCRIPTION	CAI *MSPN*	Max. dist./ hour **km** *mile*	TKPH [1] *TMPH*	e **mm** *inch*	D **mm** *inch*	R' **mm** *inch*	RC **mm** *inch*	Tread depth **mm** *32rd*	Dual Spacing **mm** *inch*	Cap. **liter** *gallon*	Measuring [2] [3] Recommended Rim	Other Approved [2] [3] Rims
XDR3 MC4 E4R ** 59/80 R 63 Tubeless	**502804** *83942*	**28** *17.4*	**2240** *1534*	**1467** *57.8*	**4030** *158.7*			**110** *138.6*	**1834** *72.2*	**9840** *2599.7*	**44.00/5.0 [6.0]**	41.00/5.0 [5.5]
Bar *Psi*	**5** *73*	**5.5** *80*	**6** *87*	**6.5** *94*	**6.7** *97*	**6.8** *99*						
Machine - Use (**kg** - *lbs*)	**TRANSPORT LOAD PER TIRE 41" RIM**											
STANDARD	**82920** *182839*	**89460** *197259*	**96000** *211680*	**98900** *218075*	**100000** *220500*							
Machine - Use (**kg** - *lbs*)	**TRANSPORT LOAD PER TIRE 44" RIM**											
STANDARD			**100000** *220500*	**102100** *225131*		**104000** *229320*						

TIRE LOAD IN KG/LB – TIRE PRESSURE IN BAR/PSI

COMMERCIAL DESCRIPTION	CAI *MSPN*	Max. dist./ hour **km** *mile*	TKPH [1] *TMPH*	e **mm** *inch*	D **mm** *inch*	R' **mm** *inch*	RC **mm** *inch*	Tread depth **mm** *32rd*	Dual Spacing **mm** *inch*	Cap. **liter** *gallon*	Measuring [2] [3] Recommended Rim	Other Approved [2] [3] Rims
XDR3 MB E4R ** 59/80 R 63 Tubeless	**774172** *20068*	**24** *14.9*	**1920** *1315*	**1467** *57.8*	**4030** *158.7*			**110** *138.6*	**1834** *72.2*	**9840** *2599.7*	**44.00/5.0 [6.0]**	41.00/5.0 [5.5]
Bar *Psi*	**5** *73*	**5.5** *80*	**6** *87*	**6.5** *94*	**6.7** *97*	**6.8** *99*						
Machine - Use (**kg** - *lbs*)	**TRANSPORT LOAD PER TIRE 41" RIM**											
STANDARD	**82920** *182839*	**89460** *197259*	**96000** *211680*	**98900** *218075*	**100000** *220500*							
Machine - Use (**kg** - *lbs*)	**TRANSPORT LOAD PER TIRE 44" RIM**											
STANDARD			**100000** *220500*	**102100** *225131*		**104000** *229320*						

COMMERCIAL DESCRIPTION	CAI *MSPN*	Max. dist./ hour **km** *mile*	TKPH [1] *TMPH*	e **mm** *inch*	D **mm** *inch*	R' **mm** *inch*	RC **mm** *inch*	Tread depth **mm** *32rd*	Dual Spacing **mm** *inch*	Cap. **liter** *gallon*	Measuring [2] [3] Recommended Rim	Other Approved [2] [3] Rims
XDR3 MB4 E4R ** 59/80 R 63 Tubeless	**430321** *73530*	**20** *12.4*	**1600** *1096*	**1467** *57.8*	**4030** *158.7*	**1742** *68.6*	**11974** *471.4*	**110** *138.6*	**1834** *72.2*	**9840** *2599.7*	**44.00/5.0 [6.0]**	41.00/5.0 [6.0]
Bar *Psi*	**5** *73*	**5.5** *80*	**6** *87*	**6.5** *94*	**6.7** *97*	**6.8** *99*						
Machine - Use (**kg** - *lbs*)	**TRANSPORT LOAD PER TIRE 41" RIM**											
STANDARD	**82920** *182839*	**89460** *197259*	**96000** *211680*	**98900** *218075*	**100000** *220500*							
Machine - Use (**kg** - *lbs*)	**TRANSPORT LOAD PER TIRE 44" RIM**											
STANDARD			**100000** *220500*	**102100** *225131*		**104000** *229320*						

COMMERCIAL DESCRIPTION	CAI *MSPN*	Max. dist./ hour **km** *mile*	TKPH [1] *TMPH*	e **mm** *inch*	D **mm** *inch*	R' **mm** *inch*	RC **mm** *inch*	Tread depth **mm** *32rd*	Dual Spacing **mm** *inch*	Cap. **liter** *gallon*	Measuring [2] [3] Recommended Rim	Other Approved [2] [3] Rims
XDR3 + MB E4R ** 59/80 R 63 Tubeless	**535123** *03414*	**24** *14.9*	**1920** *1315*	**1467** *57.8*	**4030** *158.7*	**1742** *68.6*	**11974** *471.4*	**110** *138.6*	**1834** *72.2*	**9840** *2599.7*	**44.00/5.0 [6.0]**	41.00/5.0 [6.0]
Bar *Psi*	**5** *73*	**5.5** *80*	**6** *87*	**6.5** *94*	**6.7** *97*	**6.8** *99*						
Machine - Use (**kg** - *lbs*)	**TRANSPORT LOAD PER TIRE 41" RIM**											
STANDARD	**82920** *182839*	**89460** *197259*	**96000** *211680*	**98900** *218075*	**100000** *220500*							
Machine - Use (**kg** - *lbs*)	**TRANSPORT LOAD PER TIRE 44" RIM**											
STANDARD			**100000** *220500*	**102100** *225131*		**104000** *229320*						

COMMERCIAL DESCRIPTION	CAI *MSPN*	Max. dist./ hour **km** *mile*	TKPH [1] *TMPH*	e **mm** *inch*	D **mm** *inch*	R' **mm** *inch*	RC **mm** *inch*	Tread depth **mm** *32rd*	Dual Spacing **mm** *inch*	Cap. **liter** *gallon*	Measuring [2] [3] Recommended Rim	Other Approved [2] [3] Rims
XDR3 + MB4 E4R ** 59/80 R 63 Tubeless	**417433** *16577*	**20** *12.4*	**1600** *1096*	**1467** *57.8*	**4030** *158.7*	**1742** *68.6*	**11974** *471.4*	**110** *138.6*	**1834** *72.2*	**9840** *2599.7*	**44.00/5.0 [6.0]**	41.00/5.0 [6.0]
Bar *Psi*	**5** *73*	**5.5** *80*	**6** *87*	**6.5** *94*	**6.7** *97*	**6.8** *99*						
Machine - Use (**kg** - *lbs*)	**TRANSPORT LOAD PER TIRE 41" RIM**											
STANDARD	**82920** *182839*	**89460** *197259*	**96000** *211680*	**98900** *218075*	**100000** *220500*							
Machine - Use (**kg** - *lbs*)	**TRANSPORT LOAD PER TIRE 44" RIM**											
STANDARD			**100000** *220500*	**102100** *225131*		**104000** *229320*						

TIRE LOAD IN KG/LB – TIRE PRESSURE IN BAR/PSI

COMMERCIAL DESCRIPTION	CAI *MSPN*	Max. dist./ hour **km** *mile*	TKPH [1] *TMPH*	e **mm** *inch*	D **mm** *inch*	R' **mm** *inch*	RC **mm** *inch*	Tread depth **mm** *32rd*	Dual Spacing **mm** *inch*	Cap. **liter** *gallon*	Measuring [2] [3] Recommended Rim	Other Approved [2] [3] Rims
XDR4 EXTRA LOAD MB E4R * 59/80 R 63 Tubeless**	**265198** *97806*	**24** *14.9*	**2208** *1512*	**1495** *58.9*	**4027** *158.5*	**1737** *68.4*	**11958** *470.8*	**100** *126*		**10126** *2675.3*	**44.00/5.0 [6.0]**	44.00/5.0 [5.5]
Bar	**7**	**7.25**	**7.5**									
Psi	*102*	*105*	*109*									
Machine - Use (**kg** - *lbs*)	**TRANSPORT**											
STANDARD	**109000** *240345*	**112000** *246960*	**115000** *253575*									

COMMERCIAL DESCRIPTION	CAI *MSPN*	Max. dist./ hour **km** *mile*	TKPH [1] *TMPH*	e **mm** *inch*	D **mm** *inch*	R' **mm** *inch*	RC **mm** *inch*	Tread depth **mm** *32rd*	Dual Spacing **mm** *inch*	Cap. **liter** *gallon*	Measuring [2] [3] Recommended Rim	Other Approved [2] [3] Rims
XDR4 EXTRA LOAD MB4 E4R * 59/80 R 63 Tubeless**	**233050** *17772*	**20** *12.4*	**1840** *1260*	**1495** *58.9*	**4027** *158.5*	**1737** *68.4*	**11958** *470.8*	**100** *126*		**10126** *2675.3*	**44.00/5.0 [6.0]**	44.00/5.0 [5.5]
Bar	**7**	**7.25**	**7.5**									
Psi	*102*	*105*	*109*									
Machine - Use (**kg** - *lbs*)	**TRANSPORT**											
STANDARD	**109000** *240345*	**112000** *246960*	**115000** *253575*									

COMMERCIAL DESCRIPTION	CAI *MSPN*	Max. dist./ hour **km** *mile*	TKPH [1] *TMPH*	e **mm** *inch*	D **mm** *inch*	R' **mm** *inch*	RC **mm** *inch*	Tread depth **mm** *32rd*	Dual Spacing **mm** *inch*	Cap. **liter** *gallon*	Measuring [2] [3] Recommended Rim	Other Approved [2] [3] Rims
XDR4 EXTRA LOAD MC4 E4R * 59/80 R 63 Tubeless**	**320785** *06838*	**28** *17.4*	**2576** *1765*	**1495** *58.9*	**4027** *158.5*	**1737** *68.4*	**11958** *470.8*	**100** *126*		**10126** *2675.3*	**44.00/5.0 [6.0]**	44.00/5.0 [5.5]
Bar	**7**	**7.25**	**7.5**									
Psi	*102*	*105*	*109*									
Machine - Use (**kg** - *lbs*)	**TRANSPORT**											
STANDARD	**109000** *240345*	**112000** *246960*	**115000** *253575*									

MICHELIN TECHNICAL DATA

EARTHMOVER TIRES

GENERAL INFORMATION

COMPARISON BETWEEN BIAS AND RADIAL TIRES PAGE 130
- THE MICHELIN® X® RADIAL PAGE 130
- BIAS OR CROSS-PLY CONSTRUCTION PAGE 130

ADVICE AND RECOMMENDATIONS ON THE USE OF MICHELIN EARTHMOVER TIRES PAGE 131
- CHOICE OF TIRE PAGE 131
- USE OF TIRES PAGE 131
- FITTING PAGE 132
- OPERATING PRESSURE PAGE 133
- STORAGE AND MAINTENANCE PAGE 133
- MACHINE CHECKS AND MAINTENANCE PAGE 134
- PRODUCT LIFE PAGE 135
- EXPLANATION OF THE DIFFERENT MEASUREMENTS PAGE 136
- READING GUIDE FOR LOAD, PRESSURE AND USE TABLES PAGE 136

CLASSIFICATION OF MICHELIN TIRES PAGE 137
- ACCORDING TO THEIR ASPECT RATIO PAGE 137
- ACCORDING TO THE STANDARDIZED USAGE (ISO-ETRTO-TRA-JATMA*) PAGE 138
- ACCORDING TO THEIR TREAD DEPTHS PAGE 138
- SUMMARY PAGE 138

TIRE MARKINGS PAGE 139

MICHELIN EARTHMOVER TIRE COMPOUNDS PAGE 140

LOAD INDEX–SPEED SYMBOL PAGE 141
- LOAD INDEX (LI) AND MAXIMUM LOAD (KG/LB) PAGE 141
- SPEED SYMBOLS PAGE 141

EQUIVALENCE OF RESISTANCE INDEX (PR: PLY RATING) PAGE 142

TECHNOLOGY OF MICHELIN RADIAL CASING TIRES PAGE 143

ADVICE AND RECOMMENDATIONS ON THE USE OF MICHELIN EARTHMOVER TIRES PAGE 144
- USE OF TIRES PAGE 144
- EXPLANATION OF THE DIFFERENT USES PAGE 144

COMPONENTS USED WITH MICHELIN EARTHMOVER TIRES PAGE 146
- APPROVED RIMS FOR MICHELIN EARTHMOVER TIRES PAGE 146
- FLAPS + TUBES SOLUTION PAGE 152
- EXPLANATION ON THE TUBE AND THE FLAP MARKINGS PAGE 154
- O-RINGS OR CORNER SEALS SOLUTION PAGE 155
- VALVES AND ASSOCIATED ACCESSORIES FOR MICHELIN EARTHMOVER TIRES PAGE 156

HELP WITH THE USE OF EARTHMOVER TIRES PAGE 160
- MICHELIN EARTHMOVER TIRES FOR TRANSPORT MACHINES PAGE 160
- MICHELIN EARTHMOVER TIRES FOR MOBILE CRANES, SPECIAL APPLICATIONS, RAPID INTERVENTION VEHICLES (CIVIL AND MILITARY) PAGE 161
- MICHELIN EARTHMOVER TIRES USED IN DESERT AND SIMILAR CONDITIONS PAGE 161
- MICHELIN EARTHMOVER TIRES FOR WORKING MACHINES: SURFACE LOADERS IN REHANDLING, PRODUCTION, EXTRACTION AND FACEWORK PAGE 162
- MICHELIN EARTHMOVER TIRES FOR WORKING MACHINES: DOZERS PAGE 163
- MICHELIN EARTHMOVER TIRES FOR WORKING MACHINES: GRADERS PAGE 163
- MICHELIN EARTHMOVER TIRES FOR COMPACTORS PAGE 164
- MICHELIN EARTHMOVER TIRES FOR ROADBUILDING MACHINERY (PLANERS, STABILIZER MIXERS, PAVERS) PAGE 164
- MICHELIN EARTHMOVER TIRES FOR UNDERGROUND MACHINES PAGE 165

TIRES FOR TRANSPORT MACHINES: TKPH (TMPH) METHOD PAGE 166
- FACTORS TO BE CONSIDERED WHEN SELECTING THE MOST APPROPRIATE TIRE: PAGE 166

MICHELIN EARTHMOVER TIRES FOR TRANSPORT MACHINES K COEFFICIENT CALCULATED AND USED FOR THE TKPH (TMPH) METHOD PAGE 169

MICHELIN EARTHMOVER TIRES FOR SPECIFIC USES PAGE 170
- APPROXIMATE LOOSE MATERIAL DENSITIES (t/m³) PAGE 170

APPROXIMATE LOOSE MATERIAL DENSITIES UNITS OF MEASURE AND CONVERSION TABLES PAGE 171
- UNITS OF MEASURE AND CONVERSION TABLES PAGE 171

FOOTNOTES & CAUTION PAGE 172

COMPARISON BETWEEN BIAS AND RADIAL TIRES

THE MICHELIN® X® RADIAL

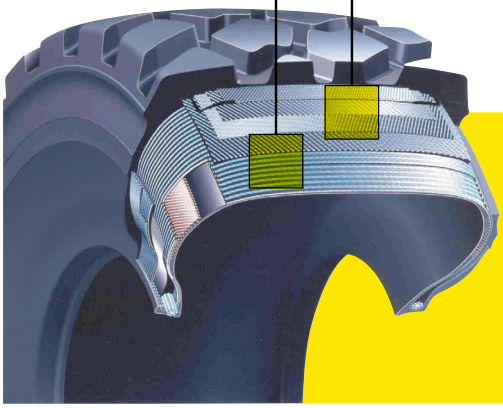

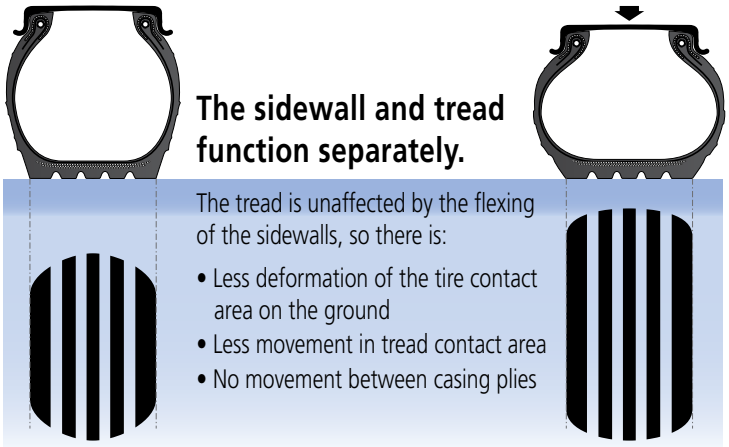

The sidewall and tread function separately.

The tread is unaffected by the flexing of the sidewalls, so there is:

- Less deformation of the tire contact area on the ground
- Less movement in tread contact area
- No movement between casing plies

Advantages:

- Long tire life
- Outstanding traction on all types of surface
- Lower fuel consumption due to lower rolling resistance
- Improved comfort
- Increased resistance to punctures/flats
- Increased resistance to heating
- Protects property and persons

BIAS OR CROSS-PLY CONSTRUCTION

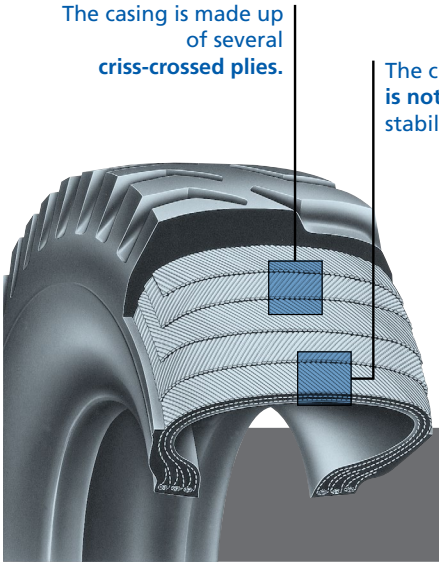

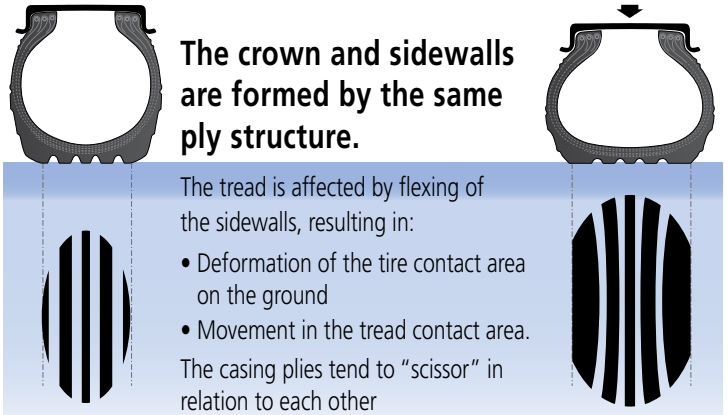

The crown and sidewalls are formed by the same ply structure.

The tread is affected by flexing of the sidewalls, resulting in:

- Deformation of the tire contact area on the ground
- Movement in the tread contact area.

The casing plies tend to "scissor" in relation to each other

Disadvantages:

- Accelerated wear
- Less grip
- Increased fuel consumption

ADVICE AND RECOMMENDATIONS ON THE USE OF MICHELIN EARTHMOVER TIRES

The following information is extracted from the Use and Maintenance Guide of MICHELIN® Earthmover Tires. For more details, visit our website www.michelinearthmover.com or contact your Michelin® Representative.



The tire is the only point of contact between the machine and the ground. Users must ensure that they preserve the life and performance of their tires. To do so, it is recommended that users adhere to the following safety instructions and usage recommendations. These recommendations are subject to more restrictive local provisions: legal, regulatory requirements, etc.

CHOICE OF TIRE

The choice of a tire must be compliant with legislation and with equipment recommended by the vehicle or tire manufacturer or by an official organization (size, load and speed indices, tire structures, etc.).

Additionally, it is necessary to take into account the conditions in which the tire will be used in order to ensure its performance can meet the user's expectations. The type of tread pattern depends mainly on conditions of use encountered: adherence, risk of cuts, rapid wear. The optimum performance of equipment depends largely on the choice of tire.

The use of a tread pattern or a tread pattern inappropriate for the work leads to a sharp reduction in the tire's life and may affect vehicle productivity.

In the event of the original vehicle equipment being modified, it is advisable to make sure that the solution offered is compliant with the legislation in force, the machine's technical constraints, conditions of use and the manufacturer's recommendations. Please refer to regulations in force in the local country.

Before being fitted, any secondhand or used tire must be subjected to careful inspection by a specialist tire professional in order to guarantee the safety of the user and compliance with the regulations in force (Vehicle Checks and Maintenance).

USE OF TIRES

GENERAL RECOMMENDATIONS

Never use the tire beyond the limits of the technical specifications for which it has been approved on the machines.

Certain excessive or abnormal geometrical settings for the machines may have a negative effect on the tire's performance.

Poor use or wrong choice of tire can also contribute to premature wearing of certain mechanical parts.

According to the current legislation and/or to the technical or safety recommendations, both tires on the same axle must be identical.

DUAL MOUNTING

For technical and safety reasons, you must adhere to the recommendations of the manufacturer of the machine.

We advise against the following mountings:

- Dual mounting of MICHELIN® Radial tires with cross-ply (bias) tires
- Dual mounting of a tire of normal tread depth with a deep-treaded tire
- Dual mounting of tires of the same type which have different remaining tread depths (some legislation sets a maximum differential)

ADVICE AND RECOMMENDATIONS ON THE USE OF MICHELIN EARTHMOVER TIRES

FITTING

INTRODUCTION



Correct fitting, performed in accordance with recommended operating procedures and complying with the safety rules in force, ensures excellent protection for people and materials and allows the tires' full potential to be exploited.

Poor fitting can cause damage to the tires, the vehicle and/or cause serious injury or even death.

It is therefore essential that these operations are carried out by people who have been trained and who have the appropriate equipment available, and in accordance with the procedures.

We strongly recommend that tire fitting is undertaken by a trained tire professional with proper equipment.

Tube-type tires must be fitted with an appropriate flap and inner tube.

In all cases, it is essential to refer to the technical instructions of the tire manufacturer, vehicle manufacturer and wheel manufacturer, as well as the user manual for the tire-fitting machinery or equipment.

GENERAL PRECAUTIONS

Operators must always wear appropriate protective equipment.

Operators must know recommended procedure.

Operators must ensure that the vehicle is stopped, secured (LOTO) and properly stabilized (parking brake engaged, blocks), and motor turned off.

PRECAUTIONS FOR REMOVAL

a) **When removing the vehicle wheel**

If the tire is twin-fitted or if the rim shows evidence of damage, **the tires must be deflated prior** to removal of the whole fitment (remove the valve core). Failure to observe this could lead to accidents with very serious consequences. Comply with the manufacturers' recommendations and instructions when removing a tire.

b) **When the tire is removed from the vehicle**

Completely deflate the tire before any operation.

PRECAUTIONS FOR FITTING

- Ensure that the wheel and its components are in good condition
- Verify the compatibility of the tire and the wheel (wheel authorized for the tire) and the pressure capacity of the wheel
- Adhere to the positions, direction of fitting, direction of rotation and any other instructions referred to on the tire sidewall.
- In the case of multi-piece wheels, replace the o-ring seal
- In the case of tubeless mounting
  - With a rubber valve, this must be systematically replaced
  - With metallic valves, check the air tightness and continue with the replacement of valve cores or seals if necessary
- After fitting the tire to the vehicle, a torque wrench must be used to achieve the optimal torque as specified by the machine manufacturer.

PRECAUTIONS FOR INFLATING

Tire inflation is an essential factor, not only for optimization of tire performance but also in terms of SAFETY.

It is necessary for correct machine behavior (road holding and braking) as well as maintaining the tire's stability.

Only use inflation equipment intended for this purpose and fitted with a pressure limiter.

Everyone should be in the "Safety" zone (see diagram) during tire inflation. The red zone represents the area of greatest risk for being in the path of any potential discharge in the event of an incident.



* A minimum distance of 6 meters or 20 feet is required from the valve to the safety zone indicated in the diagram.

ADVICE AND RECOMMENDATIONS ON THE USE OF MICHELIN EARTHMOVER TIRES

OPERATING PRESSURE

The inflation pressure must follow the manufacturer's recommended inflation pressure.

In the absence of real data used to determine the tire pressure (weighing results, driving conditions, etc.), the operating pressure should be given only by the Michelin Representative or by a qualified professional who is trained to take into account the working conditions of the tire (ground conditions, cycle lengths, transported materials, etc.).

Underinflation or overinflation can significantly affect tire performance.

Running underinflated causes an abnormal rise in temperature of the tire and can cause the degradation of its components. This degradation is irreversible and may lead to damage of the tire, causing rapid deflation. The consequences of running with insufficient pressure are not necessarily immediate and may appear even after rectification of the tire inflation pressure.

STORAGE AND MAINTENANCE



Tires are rubber-based and are affected by conditions of storage and use.

Storage does not adversely affect the life of the tire, but it must be under specific conditions, limited in time, and as far as possible inside.

- In premises that are well-ventilated, dry and temperate, protected from direct sunlight and bad weather
- Away from any chemical substances, solvents or hydrocarbons likely to interfere with the nature of the rubber
- Away from any object that could penetrate the rubber (sharp metal, wood, etc.)
- Away from any source of heat, flame, incandescent object, material that could cause sparks or electrical discharges and any ozone sources (transformers, electric motors, soldering devices, etc.).

Poor handling of an unfitted tire can cause it to be irreparably damaged.

In order to eliminate the risk of bead damage and the problems which could result, we strongly advise that:

1 - The tire is not lifted directly by the bead with a crane hook.

2 - Flat straps are used (not steel slings or chains).

3 - The tire is lifted under the tread and not on the beads when a forklift truck with telescopic forks is used.

Moreover, accessories must be stored in their original packaging, on surfaces that do not present any danger of cutting, tearing or perforation.

In all cases, for the handling of tires and accessories, operators must

- Be equipped with protective clothing
- Observe the safety policies of the company
- Use suitable material/equipment for the job
- Not use instruments and/or equipment that may be harmful to tires

For more information, especially for terms and conditions of storage and height stacking of the tires, see Chapter 3 of the Use and Maintenance Guide.

ADVICE AND RECOMMENDATIONS ON THE USE OF MICHELIN EARTHMOVER TIRES

MACHINE CHECKS AND MAINTENANCE

GENERAL RECOMMENDATIONS

Ensure that the machine is stationary and secured before any inspection.

Tires must be inspected regularly in order to detect any unusual wear and potential damage.

Wheel torque must be checked in accordance with the machine manufacturer's recommendations.

Any perforations, cuts or visible distortion of the tread, sidewalls or flange area must be the subject of a thorough examination of the tire by a tire professional. It is the same for any damage to the rim. In all circumstances, do not put a tire that exhibits damage back into operation, such as deformed bead or visible bead wire, separations between components, visible cable cords, damage from petroleum products or corrosive particles, marbling or abrasion of the interior rubber resulting from any running at insufficient pressure.

Each time the machine is inspected, check that the valve cap is in good condition. If in doubt, replace it.

CHECKING FOR WEAR



Checking for wear must always be carried out at several points on the tire.

This check can be carried out using a tire depth gauge or by looking for signs of wear on the tread (noted on the sidewall by a symbol when present).

If the legal or technical limit for wear has been reached, the tire must be removed and replaced.

A tire professional should be consulted if there is abnormal wear or a difference in wear between two tires on the same axle.

REPAIR

Not all damage can be repaired.

All repairs must be carried out by a trained and qualified tire professional.

A qualified tire professional should perform a detailed inspection of the tires before repairs can be made. A tire that has been run underinflated or flat may have suffered irreversible damage and only an exhaustive check of the interior of the tire will enable a diagnosis of whether or not the tire can be put back into use.

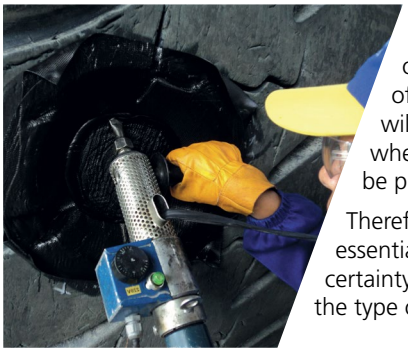

Therefore, removal of the tire is essential in order to assess with certainty its actual condition and the type of repair required.

PRESSURE

Given that a tire loses pressure naturally, it is necessary to adjust it periodically.

This check will enable any abnormal loss of pressure to be detected.

This check must be carried out on all the vehicle's tires.

A tire operated with insufficient pressure will undergo an abnormal rise in operating temperature, which can lead to irreversible damage of internal components and cause its complete destruction, to include rapid deflation of the tire. The consequences of running with insufficient inflation pressure are not necessarily immediate and may appear even after rectification.

Excessive pressure can cause rapid and irregular wear, resulting in increased susceptibility to impacts (tread damage, rupture of the casing, etc.).

It is recommended that tire pressures are checked when tires are cold. If they are checked after running, the tires are hot and pressure will not be accurate.

If pressure is checked when hot, the pressure should be readjusted according to the manufacturer's recommendations (consult your Michelin Representative).

Given that pressure increases with temperature, a hot tire must never be deflated.

Always respect the equality of pressure between dual tires.

Inflation with nitrogen is not an exemption from the need to check tire pressure regularly.

In all circumstances, adhere to the pressures recommended by the machine or tire manufacturers.



ADVICE AND RECOMMENDATIONS ON THE USE OF MICHELIN EARTHMOVER TIRES

PRODUCT LIFE

Tires are made from different types of materials and rubber-based components, whose properties are essential to the proper running of the tire itself. These properties evolve over time.

For each tire, this evolution depends on many factors, such as climate, storage conditions (temperature, humidity, position, etc.), and conditions of use (load, speed, inflation pressure, road damage, etc.) to which the tire is subjected during its working life.

These in-use conditions vary so much that it is impossible to predict the life of a tire with any accuracy. This is why, in addition to regular user checks, it is recommended to have the tires regularly checked by a qualified tire professional, who will determine whether the tire is fit to continue in operation.

Michelin may in no way be held responsible for damage that may occur as a result of use contrary to its instructions.

The preceding information is extracted from the USE AND MAINTENANCE GUIDE FOR MICHELIN® EARTHMOVER TIRES.

For more details, consult our website
www.michelinearthmover.com
OR YOUR MICHELIN REPRESENTATIVE.



ADVICE AND RECOMMENDATIONS ON THE USE OF MICHELIN EARTHMOVER TIRES

EXPLANATION OF THE DIFFERENT MEASUREMENTS

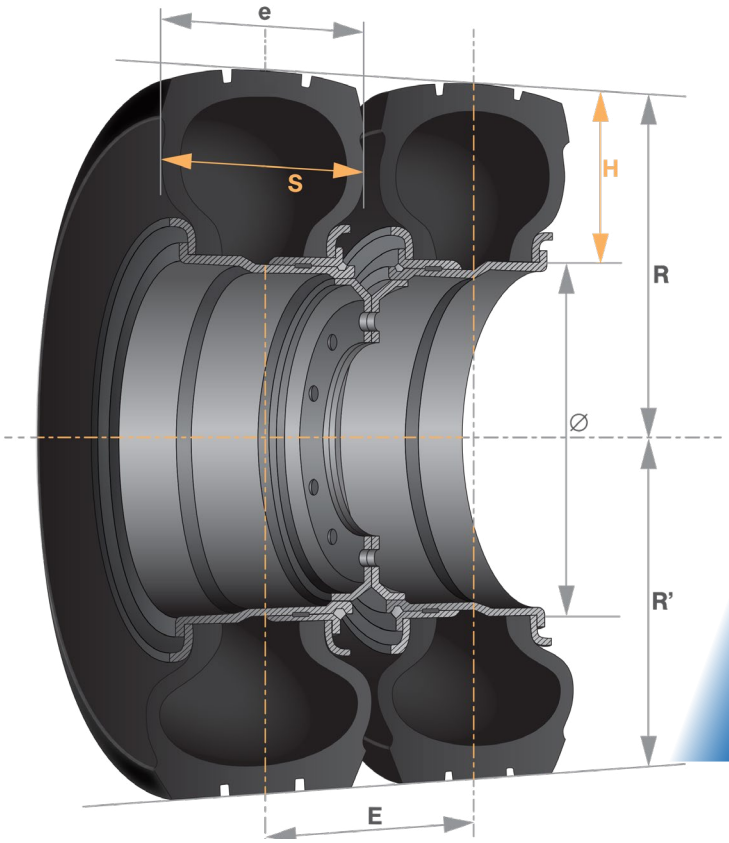

e	Maximum overall section width on measuring rim (this rim is indicated in bold)
D	External tire diameter (R x 2)
Ø	Nominal bead seat diameter (rim diameter)
S	Standard section width
E	Minimum dual spacing (on measuring rim)
H	Standard section height
R	Free radius (2R = D)
R'	Static loaded radius*
RC	Rolling circumference*
Tread depth	Tire tread depth in mm (rubber depth that can be used without risking damage to plies)
Cap.	Interior capacity of the tire (to calculate the nitrogen quantity when inflated with nitrogen, or the liquid quantity when filled). This information is not required when inflated with air.

**Determined by the reference conditions.*

The dimensional data given in tabular form in this publication (as indicated above) conforms to those of the European Standard (E.T.R.T.O.). They are given for information only and may change.

READING GUIDE FOR LOAD, PRESSURE AND USE TABLES

Remember: the correct pressure for the tire (on a site and for a job) depends on the working conditions and type of use.

In order to obtain optimum performance from the tire, it is advised that:

- The machine is weighed under working loads
- The maximum distance allowed per hour for the tire is not exceeded

The shaded box of pressure, load and use tables is the value defined by the industry standards. Up to this limit, the tire works in an optimal zone leading to a better balance of performance.

The use of MICHELIN® Earthmover tires outside the specification of pressure, load and use tables must have a prior technical validation given by your Michelin® Representative.

CLASSIFICATION OF MICHELIN TIRES

ACCORDING TO THEIR ASPECT RATIO

The wide diversity of earthmover machines and their uses requires the development of numerous ranges of tires.

Earthmover tires differ from those mounted on cars or commercial vehicles by:

- Their size and weight
- Their tread depths, which are proportionally greater
- More reinforcements to deal with the harsher conditions of use

There are several families of earthmover tires, characterized by their aspect ratio H/S (ratio in % between the height of the sidewall H and the section width of the tire S).

H = standard section height *(see page 136)* **S = standard section width** *(see page 136)*

100 SERIES (STANDARD)

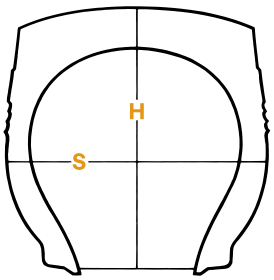

The H/S ratio is approximately equal to 1.

$$\frac{H}{S} = 100\ \%$$

The section width is expressed in inches with two decimal places.
Examples: 18.00 R 33
Tires for rigid trucks, handling equipment, etc.
The aspect ratio is not indicated in the size designation.

80 SERIES

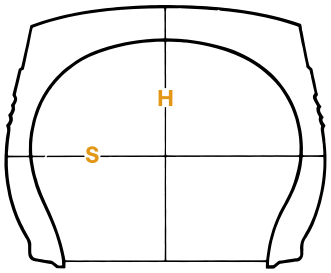

The H/S ratio is approximately equal to 0.80.

$$\frac{H}{S} = 80\ \%$$

The section width is expressed in inches and fractions of an inch.
Examples: 8.25 R 15, 20.5 R 25
The aspect ratio is not indicated in the size designation.
or in inches followed by the number 80
Example: 59/80 R 63
Tires for rigid trucks, articulated dumpers, loaders, handling equipment, etc.

65 SERIES

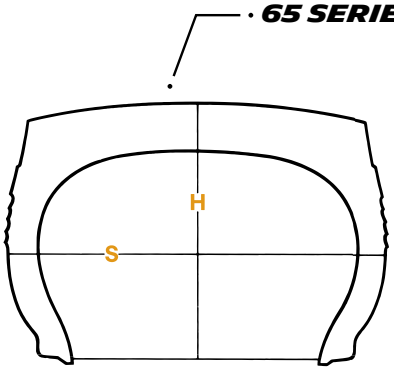

The H/S ratio is approximately equal to 0.65.

$$\frac{H}{S} = 65\ \%$$

The section width is expressed in inches or in millimeters, followed by the number 65.
Examples: 35/65 R 33, 750/65 R 25
Tires for large loaders, articulated trucks, etc.

90 SERIES

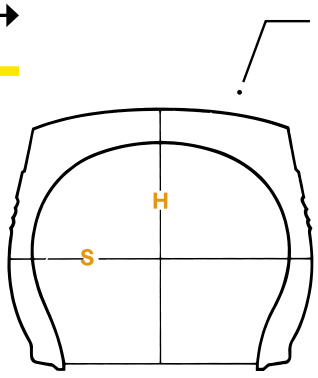

The H/S ratio is approximately equal to 0.90.

$$\frac{H}{S} = 90\ \%$$

The section width is expressed in inches followed by the number 90.
Example: 50/90 R 57
Tires for rigid trucks

Other series of tires are also available: 95 series, 75 series, etc.

CLASSIFICATION OF MICHELIN TIRES

ACCORDING TO THE STANDARDIZED USAGE (ISO-ETRTO-TRA-JATMA*)

The four main categories of earthmover tire are defined by their use. The category to which it belongs is indicated on the sidewall of the tire.

This is an international classification:

- **C** Compactor
- **G** Grader
- **E** Earthmoving
- **SH** Subterranean Haulage
- **L** Loader and bulldozer

* ***ISO***: *International Standard Organization*
ETRTO: *European Tyre and Rim Technical Organization*
TRA: *Tire and Rim Association*
JATMA: *Japan Automobile Tire Manufacturers Association*

Within these categories, there are different tread depths and special tread patterns, for very specific uses.
These are identified by a number.
They must be chosen according to the type of ground and the tire's condition of use.
The letter "S" indicates a smooth tread; *example: L-5S.*

- **1** Ribbed (normal tread depth)
- **2** Traction (normal tread depth)
- **3** Normal (normal tread depth)
- **4** Deep Tread
- **5** Extra Deep Tread

ACCORDING TO THEIR TREAD DEPTHS

The tread depth *SUPER, D1, D2* is sometimes indicated on the sidewall tire.

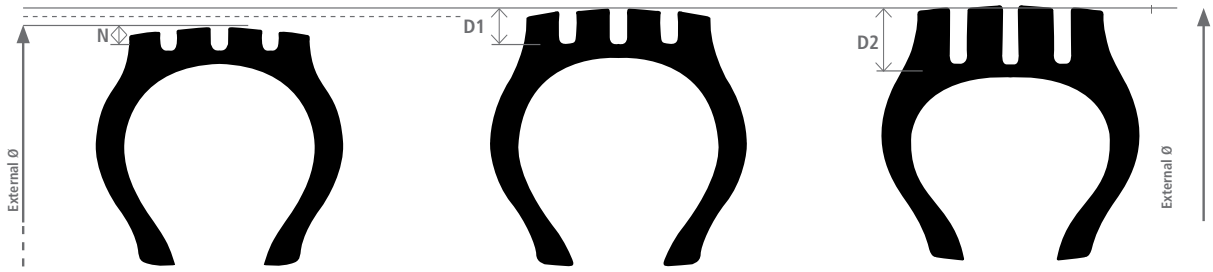

(E-2, E-3, L-2, L-3, G-2, G-3)
Traction/Regular tread
Michelin designation:
N (Normal)

(E-4, L-4, G-4)
Deep tread
Aggressive ground
Michelin designation:
D1 = N x 1.5

(L-5)
Extra-deep tread
Abrasive and aggressive ground
Michelin designation:
D2 = N x 2.5

SUMMARY

CODE	TREAD PATTERN	APPLICATION
C-1	SMOOTH	Compactor
E-1	RIBBED	Transport
E-2	TRACTION	
E-3	REGULAR TREAD	
E-4	DEEP TREAD	
E-7	FLOTATION	
SH-3	REGULAR TREAD	Subterranean Transport
SH-4	DEEP TREAD	
G-1	RIBBED	Grader
G-2	TRACTION	
G-3	REGULAR TREAD	
G-4	DEEP TREAD	
G-5	VERY DEEP TREAD	
L-2	TRACTION	Loader Bulldozer
L-3	REGULAR TREAD	
L-4	DEEP TREAD	
L-5	VERY DEEP TREAD	
L-3S	SMOOTH REGULAR TREAD	
L-4S	SMOOTH DEEP TREAD	
L-5S	SMOOTH VERY DEEP TREAD	

In addition, Michelin provides complementary identification to some earthmover tires:
T = Traction, R = Rock, V = Speed, F = Flotation, P = Multi-purpose, S/R = Smooth/Rock
e.g.: L-3T Normal tread depth tire (L-3; Standardized identification code) where traction is needed

TIRE MARKINGS

WHAT YOU CAN LEARN FROM THE SIDEWALL MARKING



MICHELIN®
X MINE® D2

1. Nominal section width of the tire (in inches): 35
2. Tire series: aspect ratio = 0.65
3. Radial construction: R
4. Rim diameter (in inches): 33
5. Load index of the tire: **
6. Type of use: loader (L) with deep tread (5)
7. Radial tire
8. Tire for loader
9. Tubeless tire
10. Manufacturer: **Michelin**
11. Tread pattern: **X MINE D2**



MICHELIN®
X-CRANE +®

- **Radial** construction
- Nominal section width of the tire (in mm): **525**
- Tire series: **aspect ratio = 0.80**
- Rim diameter (in inches): **25**
- Tubeless
- Brand: **Michelin**
- Tread pattern: **X-CRANE +**

12. Load index of the tire: **170**
13. Reference speed symbol of the tire: **F**
14. Regroovable



MICHELIN®
XDR® 2

- **Radial** construction
- Nominal section width of the tire (in inches): **37**
- Rim diameter (in inches): **57**
- Tubeless
- Brand: **Michelin**

15. Tire compound: **B4** *(explanation page 147)*

- Tread pattern: **XDR 2**
- Identification code: **E4** (transport, deep tread)
- Load capacity: **

MICHELIN EARTHMOVER TIRE COMPOUNDS

	TYPES	DESCRIPTION	TKPH (TMPH)#
Aggression Resistant	A4	Particularly resistant to cuts, tread tearing and abrasion on very rough surfaces	Minimum
	A	Particularly resistant to cuts, tread tearing and abrasion at average speeds that are higher than those for A4 (above)	Low
Standard	B4	Compromise solution between abrasion resistance and average speed on rough surfaces	Moderate
	MB4	Same as Type B4 but with a higher wear resistance	
	B	Higher resistance to internal heat generation on surfaces that are not particularly rough	Average
	MB	Same as Type B but with a higher wear resistance	
Heat Resistant	C4	Adapted to running on long cycles at high speeds on well-maintained roads	High
	MC4	Same as Type C4 but with a higher wear resistance	
	C	Very high resistance to high average speeds on long cycles run on well-maintained roads	Very High
	MC	Same as Type C but with a higher wear resistance	
	MD	Maximum resistance to highest average speeds on long cycles run on well-maintained roads	

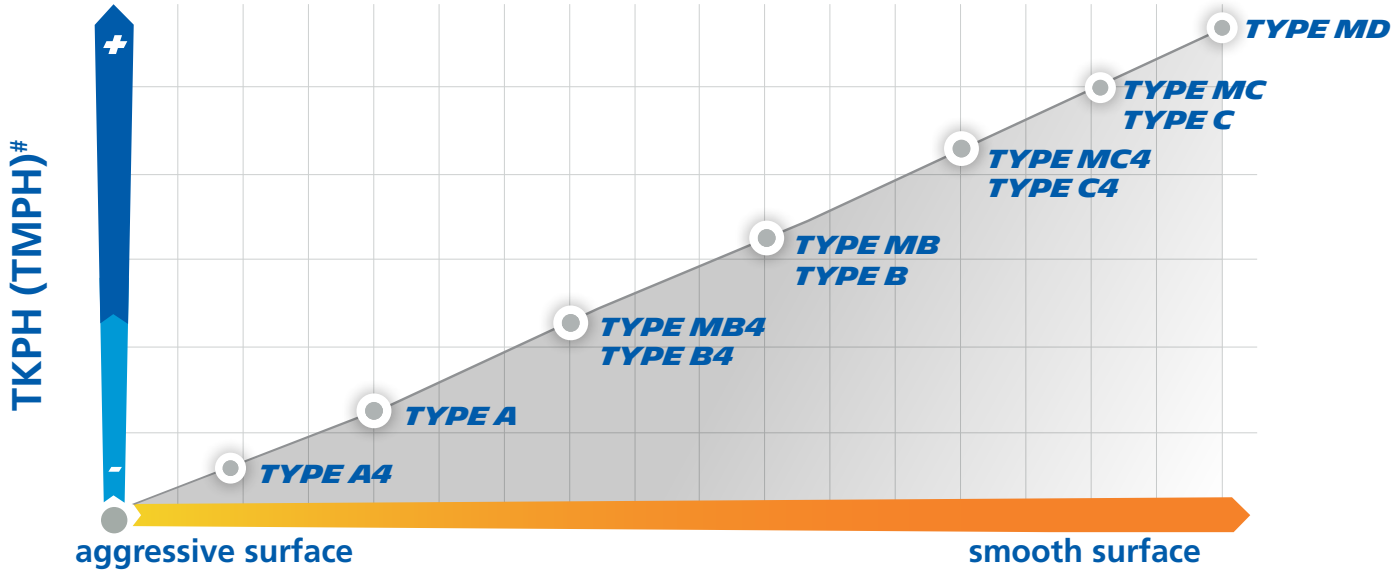

TKPH: Ton kilometer per hour
TMPH: Ton mile per hour
(#) see page 174

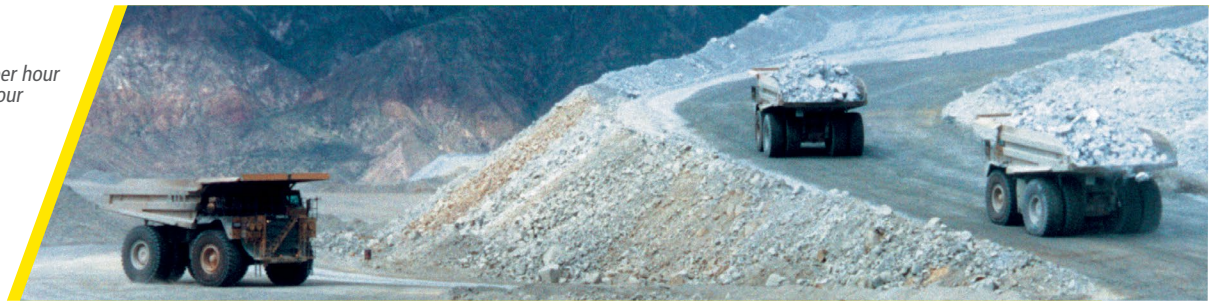

LOAD INDEX–SPEED SYMBOL

Some tires bear a load index and a speed symbol.

LOAD INDEX (LI) AND MAXIMUM LOAD (KG/LB)

The *load index* is a numerical code which indicates the maximum load a tire can carry at the speed corresponding to its speed symbol, under specified conditions.

LI	MAXIMUM LOAD		LI	MAXIMUM LOAD		LI	MAXIMUM LOAD		LI	MAXIMUM LOAD		LI	MAXIMUM LOAD	
	KG	LB		KG	LB		KG	LB		KG	LB		KG	LB
LI	kg	lb	LI	kg	lb	LI	kg	lb	LI	kg	lb	LI	kg	lb
120	1400	3080	154	3750	8250	188	10000	22000	222	26500	58400	256	71000	156500
121	1450	3200	155	3875	8550	189	10300	22700	223	27250	60000	257	73000	161000
122	1500	3300	156	4000	8800	190	10600	23400	224	28000	61500	258	75000	165500
123	1550	3420	157	4125	9100	191	10900	24000	225	29000	64000	259	77500	171000
124	1600	3520	158	4250	9350	192	11200	24700	226	30000	66000	260	80000	176500
125	1650	3640	159	4375	9650	193	11500	25400	227	30750	68000	261	82500	182000
126	1700	3740	160	4500	9900	194	11800	26000	228	31500	69500	262	85000	187500
127	1750	3860	161	4625	10200	195	12150	26800	229	32500	71500	263	87500	193000
128	1800	3960	162	4750	10500	196	12500	27600	230	33500	74000	264	90000	198500
130	1900	4180	164	5000	11000	198	13200	29100	232	35500	78500	266	95000	209500
131	1950	4300	165	5150	11400	199	13600	30000	233	36500	80500	267	97500	215000
132	2000	4400	166	5300	11700	200	14000	30900	234	37500	82500	268	100000	220500
133	2060	4540	167	5450	12000	201	14500	32000	235	38750	85500	269	103000	227000
134	2120	4680	168	5600	12300	202	15000	33100	236	40000	88000	270	106000	233500
135	2180	4800	169	5800	12800	203	15500	34200	237	41250	91000	271	109000	240500
136	2240	4940	170	6000	13200	204	16000	35300	238	42500	93500	272	112000	247000
137	2300	5080	171	6150	13600	205	16500	36400	239	43750	96500	273	115000	253500
138	2360	5200	172	6300	13900	206	17000	37500	240	45000	99000	274	118000	260000
139	2430	5360	173	6500	14300	207	17500	38600	241	46250	102000	275	121000	267000
141	2575	5680	175	6900	15200	209	18500	40800	243	48750	107500	277	128000	283500
142	2650	5840	176	7100	15700	210	19000	41900	244	50000	110000	278	132000	291000
143	2725	6000	177	7300	16100	211	19500	43000	245	51500	113500	279	136000	300000
144	2800	6150	178	7500	16500	212	20000	44100	246	53000	117000	280	140000	308500
145	2900	6400	179	7750	17100	213	20600	45400	247	54500	120000	281	145000	319500
146	3000	6600	180	8000	17600	214	21200	46700	248	56000	123500	282	150000	330500
147	3075	6800	181	8250	18200	215	21800	48100	249	58000	128000	283	155000	341500
148	3150	6950	182	8500	18700	216	22400	49400	250	60000	132500	284	160000	352500
149	3250	7150	183	8750	19300	217	23000	50700	251	61500	135500	285	165000	364000
150	3350	7400	184	9000	19800	218	23600	52000	252	63000	139000	286	170000	375000
151	3450	7600	185	9250	20400	219	24300	53600	253	65000	143500	287	175000	386000
152	3550	7850	186	9500	20900	220	25000	55100	254	67000	147500	288	180000	397000
153	3650	8050	187	9750	21500	221	25750	56800	255	69000	152000	289	185000	408000

SPEED SYMBOLS

The *speed symbol* indicates the maximum speed at which the tire can carry a load corresponding to its load index, under specified conditions.

CODE	A2	A3	A4	A5	A6	A8	B	C	D	E	F	G
speed (km/h)	10	15	20	25	30	40	50	60	65	70	80	90
speed (mph)	6	9	12	15	19	25	31	37	40	43	50	56

Examples of tire marking:

23.5 R 25 X®-SUPER TERRAIN TL 185 B; this tire is able to carry 9250 kg at a speed of 50 km/h (20,390 lb at 31 mph)
445/95 R 25 X-CRANE® TL 174 F; this tire is able to carry 6700 kg at a maximum speed of 80 km/h (14,770 lb at 50 mph)

It is imperative:
- **Not to exceed the permitted maximum speed of the tire.**
- **Not to exceed the permitted maximum distances in one hour as indicated in the tables of tire characteristics.**
- **Not to exceed the permitted TKPH**
- **That, at the time of fitting, the various markings be checked in order to be certain that the tire is suitable for operation at the maximum allowed vehicle speed and load.**

EQUIVALENCE OF RESISTANCE INDEX (PR: PLY RATING)

To be used as a reference for the replacement of a bias ply tire by a MICHELIN® Radial tire.

SIZES AND MARKINGS	WORK MACHINES PR	TRANSPORT MACHINES PR	SIZES AND MARKINGS	WORK MACHINES PR	TRANSPORT MACHINES PR	SIZES AND MARKINGS	WORK MACHINES PR	TRANSPORT MACHINES PR
7.50 R 15	12		17.5 R 25 **	20	24	35/65 R 33 *	36	
8.25 R 15	12		18.00 R 25 *	24		35/65 R 33 ** (1)		
10.00 R 15			445/95 R 25 (174E, 177E, 177F)			35/65 R 33 E4**** L4*** (1)		
350/65 R 15 (1)			445/80 R 25 (170E)			37.5 R 33 **		48
14.5 R 15			18.00 R 25 **		36	21.00 R 35 **		44
400/80 R 15 (1)			20.5 R 25 *	24		24.00 R 35 **		48
9.00 R 20	16		20.5 R 25 **		28	29.5 R 35 **		40
10.00 R 20	16		505/85 R 25 (183E)			33.25 R 35 **		44
12.00 R 20	18		550/65 R 25 * (1)			37.25 R 35 **		48
E20 (13./80 R 20) (1)			21.00 R 25 **		40	37.5 R 39 **		52
14.00 R 20 (1)			23.5 R 25 *	28		40/65 R 39 *	42	
16.00 R 20			23.5 R 25 **		32	40.5/75 R 39 **		54
525/70 R 20.5			525/80 R 25 (179E)			45/65 R 39 * (1)		
24 R 20.5			600/65 R 25 * (1)			45/65 R 45 *	50	
24 R 21			650/65 R 25 (1)			24.00 R 49 **		48
12.00 R 24 ***	24	24	26.5 R 25 *	32		27.00 R 49 **		54
13.00 R 24 TG *	14		26.5 R 25 **		32	30.00 R 51 **		64
14.00 R 24 TG *	16		750/65 R 25 (1)			33.00 R 51 **		68
14.00 R 24	24		29.5 R 25 *	34		36.00 R 51 **		74
14.00 R 24 ***	28	32	29.5 R 25 **		34	50/65 R 51 ** (1)		
385/95 R 24 (170E, 170F)			850/65 R 25 (1)			37.00 R 57 ** (1)		
15.00 R 24 (17/80 R 24) (1)			26.5 R 29 **		34	40.00 R 57 **		78
16.00 R 24 TG *	16		775/65 R 29 (1)			50/80 R 57 ** (1)		
16.00 R 24 **		36	29.5 R 29 *	34		55/80 R 57 * (1)		
13.00 R 25 ***		28	29.5 R 29 **		40	50/90 R 57 ** (1)		
14.00 R 25 ***		32	33.25 R 29 **		44	60/80 R 57 (1)		
385/95 R 25 (170E, 170F)			800/65 R 29 * (1)			53/80 R 63 ** (1)		
15.5 R 25 *	16		875/65 R 29 (1)			55/80 R 63 ** (1)		
16.00 R 25 **		36	18.00 R 33 **		40	56/80 R 63 ** (1)		
395/80 R 25 (165E)			21.00 R 33 **		32	59/80 R 63 ** (1)		
17.5 R 25 *	16		33.5 R 33 **		44			

(1) No corresponding PR in these sizes which are only made in Radial construction.

TECHNOLOGY OF MICHELIN RADIAL CASING TIRES

A tire's construction is the key to its performance, and outstanding tire performance is a key competitive advantage for transport and working machines in the earthmover industry.

Earthmoving equipment can achieve outstanding performance by using Radial tires.

COMPOSITION

The Radial design combines metal or fabric plies, extending from one bead to the other, with a belt made of several steel plies designed to reinforce the crown of the tire.

A UNIQUE CONSTRUCTION WITH NUMEROUS ADVANTAGES

The sidewalls and crown work independently:

- Minimizing the deformation of the contact patch and the weight of the tire
- Improving adhesion and traction while slowing down the rate of wear
- Increasing the load capacity as the metal casing can take higher inflation pressures

The flexibility of the sidewalls of a Radial tire therefore provides greater comfort with:

- No compromise on stability
- Better resistance to damage and punctures



TIRE PERFORMANCE LEVELS THAT TRANSFORM MACHINE PERFORMANCE

Michelin invented the Radial design and is an expert in this field. Radial tires significantly improve the productivity of earthmover machines. The Radial technology offers the best compromise between the following factors: load, speed, operational efficiency of the machines, tire service life, operator safety, etc.

Using a Radial tire also improves fuel economy and reduces the environmental footprint.

THE MICHELIN® XHA® 2 TIRE



23.5–25 BIAS

Two machines are launched at 30 km/h. After disengaging the motor, we measure the distance traveled. The machine equipped with MICHELIN® tires has less rolling resistance and therefore travels further. This equates to lower fuel consumption in operation.

Image from tests carried out in our research and development in Almeria in Spain.

ADVICE AND RECOMMENDATIONS ON THE USE OF MICHELIN EARTHMOVER TIRES

USE OF TIRES

FITTING OF TG MICHELIN® EARTHMOVER TIRES (24-INCH DIAMETER)

TG tires (MICHELIN® XGLA2™, MICHELIN® X-SNOPLUS®) must only be fitted on drop-center and semi drop-center or single-piece wheels.

Do not fit these tires on flat-base rims, which are incompatible because they have differences in seat diameter.

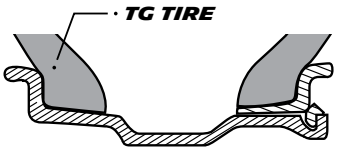

SEMI-DROP CENTER RIM (SDC)

OK ✔

FITTING OF 15.5 R 25* AND 17.5 R 25* MICHELIN® EARTHMOVER TIRES

L2* (MICHELIN® XTLA™ and MICHELIN® X SNOPLUS®) and L3* (MICHELIN® XHA®) and the MICHELIN® X CRANE + dimension 445/95 R 25 can be fitted to:

- Multi-piece SDC or flat-base rims
- Single-piece rims

NOTE: L3** and L5 tires can only be fitted to multi-piece rims.

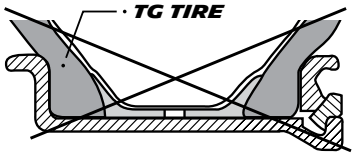

FLAT BASE RIM

NO ✘

EXPLANATION OF THE DIFFERENT USES

Important: Load/pressure scales are classified according to different uses of machines.

LOADERS

Front Laden This table is used in priority. The loads come from the weighing of the loader or the axle weight given by the manufacturer.

This is the pressure, load and use table built from the maximum reference point given by the standards.

For front tires of the loader, it is possible to increase the pressure value given in Table Front Laden up to 1 bar without changing the carrying capacity. The resulting pressure must remain below the maximum values of inflation pressure when the latter is specified (see previous page).

Rear Unladen This table is used when the weight of the rear axle of the unladen loader is known or when the rear axle weight is given by the manufacturer.

COMPACTOR

10 and 15 km/h These tables give the maximum work speeds of the compactors. In all cases, the indications and the instructions from the manufacturer must be applied (table indicating the pressure according to the work to be carried out).

UNDERGROUND MINING MACHINES

This is the table that is used for tires fitted to underground transport machines.



ADVICE AND RECOMMENDATIONS ON THE USE OF MICHELIN EARTHMOVER TIRES

GRADERS

All Axles

This is the table that is used when one has the determined the axle load (by weight or by the manufacturer.

This table is derived from a reference speed of 40 km/h. For higher speeds, a reduction in carrying capacity, as shown in the table below, is applied in accordance with the standards (ex: Year Book TRA 2019, page 4-28).

SPEED OF USE (KM/H)	VARIATION IN LOAD CAPACITY (%)
40	0
50	- 9
60	**- 18**
65	- 27

TRANSPORT (RIGID DUMP TRUCKS, TRUCKS, ETC.), ARTICULATED DUMP TRUCKS, SCRAPERS

Standard

Table loads/pressures built from the reference point *Off-the-Road Haulage Service*. This is the table that is used when one has determined the axle load (by weighing or from the manufacturer's data).

CRANES AND SIMILAR SPECIALIZED MACHINES

Standard

This is the table *Load/Speed/Pressure* that is used to adjust the pressure at the desired load based on maximum rates of use for the tires fitted on vehicles (all-terrain, mobile cranes, intervention vehicles…).

There are two ranges of tires. Reference speed 70 km/h, Speed Symbol E or reference speed 80 km/h, Speed Symbol F.

USE IN DESERTS AND SIMILAR CONDITIONS

Depending on whether the vehicle is fitted as single or twin, the corresponding load table will be adopted.

1-Road in Single/Road in Twin:
These pressures are to be applied when the vehicle runs on good roads. (This means asphalt or compacted surfaces.) For these conditions, the pressures have been calculated for a maximum speed of 80 km/h (50 mph) or 65 km/h (40 mph) depending on the tire size considered.

2-Track in Single/Track in Twin:
These pressures are recommended for driving on roads in poor condition, washboard (corrugated) and gravel or desert surfaces.
For these conditions, the pressures have been calculated

- ➔ for a maximum speed of 65 km/h (40 mph) if the speed on road is 80 km/h (50 mph)
- ➔ or a maximum speed of 50 km/h (30 mph) if the speed on road is 65 km/h (40 mph)

3-Sand in Single/Sand in Twin:
These pressures are used to allow the vehicle to cross without difficulty the difficult areas where the problem of adhesion or depression can be important. To avoid premature depletion of the kilometric performance, the speed must be limited

- ➔ to 20 km/h (12.5 mph) if the speed on road is 80 km/h (50 mph)
- ➔ to 15 km/h (9.3 mph) if the speed on road is 65 km/h (40 mph)

After *sand* use, the pressure must be readjusted for subsequent conditions of use (road or track).

COMPONENTS USED WITH MICHELIN EARTHMOVER TIRES

APPROVED RIMS FOR MICHELIN EARTHMOVER TIRES

Check that the rim support is at least the weight carried by the tire.

RIM TYPES	RIM DESIGN.	F MM INCHES	H (13) MM INCHES	D (14) MM INCHES		RIM R/A(**)	TIRE SIZES	SEAL	TL	TT
FLAT-BASE RIMS 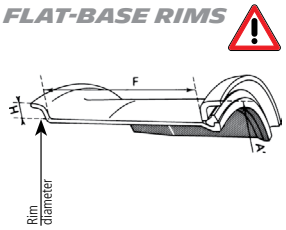	15 - **6.00 S**	152.4 6.0	33.3 1.3	387,0	381,0	A	7.50 R 15	None		
	20 - **7.33 V**	186.2 7.3	44 **1.7**	511,2	508,0	A	9.00 R 20 X MINE D2	**Tyran** (A 20)	NA	2
						A	E 20 (13/80 R 20) Pil XLC		NA	2
	20 - **8.00 V**	203.2 8.0	44 **1.7**			A	E 20 (13/80 R 20) Pil XLC		NA	2
	20 - **8.50 V**	215.9 8.5	44 **1.7**			A	12.00 R 20 X MINE D2		NA	2
						A	E 20 (13/80 R 20) Pil XLC		NA	2
	20 - **9.00 V**	228.6 9.0	44 **1.7**			A	12.00 R 20 XMINE D2		NA	2
						A	E 20 (13/80 R 20) Pil XLC		NA	2
	20 - **10.00 V**	254 10.0	44 **1.7**			A	E 20 P (13/80 R 20)		NA	2
	20 - **10.00 W**	254 10.0	51 **2.0**			R	16.00 R 20 XZL		2	2
						A	14.00 R 20 X MINE D2		2	2
	20 - **11.25**	286 11.3	51 **2.0**	511,0		A	16.00 R 20 XZL	None	2	2
	21 - **18.00**	457.2 18.0	38 **1.5**			R	24 R 21	(OR 6.8-21)		
	24 - **7.33 V**	186.2 7.3	44 **1.7**	612,8	609,6	A	12.00 R 24 ***	None		
						A	12.00 R 24 X MINE D2	G25	2	2
	24 - **8.00 V**	203.2 8.0	44 **1.7**			A	12.00 R 24 ***	None		
						A	12.00 R 24 X MINE D2	G25	2	2
	24 - **8.50 V**	216 8.5	44 **1.7**			A	12.00 R 24 ***	None		
						A	12.00 R 24 X MINE D2	G25	2	2
	24 - **9.00 V**	228.6 9.0	44 **1.7**			A	14.00 R 24 ***	None		
						A	15.00 R 24 Pil	None		
	24 - **10.00 W**	254 10.0	51 **2.0**			A	14.00 R 24 ***	None	2	2
						A	15.00 R 24 Pil	None	2	2
						A	385/95 R 24	None	2	2
15° TAPER DROP CENTER RIMS *(DC - DROP CENTER)* 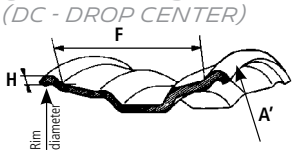	20.5 x **16.00**	406.5 16.0	12.7 **0.5**	520,7		R	525/65 R 20.5	None		
	20.5 x **18.00**	457 18.0	12.7 **0.5**			R	24 R 20.5			
5° TAPER DROP CENTER RIMS *(DC - DROP CENTER)* 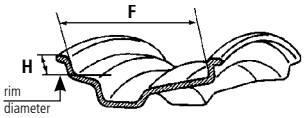	24 x **9.00/1.5**	228 9.0	38 **1.5**	614,4		A	14.00 R 24 * TG	None		
	25 x **12.00/1.3**	305 12.0	33 **1.3**	635,0		A	15.5 R 25 * L2 - L3			
	25 x **13.00/1.4**	330 13.0	36 **1.4**			A A	15.5 R 25 * L2 - L3 17.5 R 25 * L2 - L3			
	25 x **14.00/1.3**	355 14.0	33 **1.3**			A	17.5 R 25 * L2 - L3			
	25 x **14.00/1.5**	355 14.0	38 **1.5**			A	17.5 R 25 * L2 - L3			
	635 x 280 CR	280 11.0	43 **1.7**			A	445/95 R 25 X CRANE +			
5° TAPER SEMI-DROP CENTER RIMS *(SDC - SEMI-DROP CENTER)* 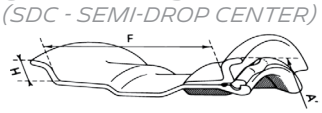	24 - **8.00 TG SDC**	203 8.0	35.5 **1.4**	614,4			13.00 R 24 * TG	**Heupo** (OR 2-25)		
						R	14.00 R 24 * TG			
	24 - **10.00 VA SDC**	254 10.0	43 **1.7**			A R	14.00 R 24 * TG 16.00 R 24 * TG			

** R = Recommended - A = Allowed

See note page 147 about TG tire fitment.

COMPONENTS USED WITH MICHELIN EARTHMOVER TIRES

APPROVED RIMS FOR MICHELIN EARTHMOVER TIRES

Check that the rim support is at least the weight carried by the tire.

RIM TYPES	RIM DESIGN.	F MM INCHES	H (13) MM INCHES	D (14) MM INCHES		RIM R/A(**)	TIRE SIZES	SEAL	TL	TT
5° TAPER BEAD SEAT RIMS 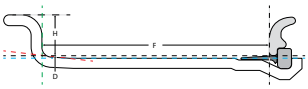 (Removable bead seat, split)	15 - **B 6.5**	165.1 6.5	38.1 **1.5**	385,8	385,8	A A	7.50 R 15 8.25 R 15	None		
	15 - **10.50**	267 10.5	38 **1.5**			R A	14.5 R 15 350/65 R 15			
	20 - **B 6.5**	165.1 6.5	38.1 **1.5**	512,8	512,8	A	9.00 R 20	**Tyran** (A 20)		
	20 - **B 7.0**	177.8 7.0	38.1 **1.5**			A	9.00 R 20 X MINE D2		NA	2
	20 - **B 7.5**	190.5 7.5	43.2 **1.7**			A	9.00 R 20 X MINE D2		NA	2
						A	E-20 (13/80 R 20) Pil XLC		NA	2
	20 - **B 8.0**	203.2 8.0	43.2 **1.7**			A	E-20 (13/80 R 20) Pil XLC		NA	2
	20 - **B 8.5**	216 8.5	45.7 **1.8**			A	12.00 R 20			
						A	E-20 (13/80 R 20) Pil XLC		NA	2
5° TAPER BEAD SEAT RIMS *(ADVANCED RIM)* 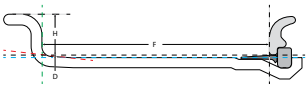 (Removable bead seat, split)	15 - **5.5**	139.7 5.5	30.5 **1.2**	387,4	387,0	A	7.50 R 15	None		
	15 - **6.0**	152.4 6.0	33 **1.3**			R A	7.50 R 15 8.25 R 15			
	15 - **6.5**	165.1 6.5	35.6 **1.4**			A R	7.50 R 15 8.25 R 15			
	15 - **7.0**	177.8 7.0	38 **1.5**			A A	10.00 R 15 8.25 R 15			
	15 - **7.5**	190.5 7.5	40.6 **1.6**			R	10.00 R 15			
	15 - **11.0**	279.4 11	38 **1.5**			A	14.5 R 15			
	15 - **11.00 BD**	279.4 11	36 **1.4**			A	14.5 R 15			
	15 - **11.50**	292.1 11.5	38 **1.5**			A	14.5 R 15			
						R	350/65 R 15			
						R	400/80 R 15			
	20 - **6.5**	165.1 6.5	35.6 **1.4**	514,4	514,0	A	9.00 R 20 X MINE D2	**Tyran** (A 20)	NA	2
	20 - **7.0**	177.8 7.0	38 **1.5**			R	9.00 R 20 X MINE D2		NA	2
	20 - **7.0 T**	177.8 7.0	38.1 **1.5**			A	9.00 R 20 X MINE D2		NA	2
	20 - **7.5**	190.5 7.5	40.6 **1.6**			A	9.00 R 20 X MINE D2		NA	2
						A	E 20 P (13/80 R 20)			
	20 - **8.0**	203.2 8.0	43.2 **1.7**			A	12.00 R 20 X MINE D2		NA	2
						A	E 20 (13/80 R 20) Pil XLC		NA	2
	20 - **8.0 V**	203.0 8.0	44.4 **1.7**			A	E 20 (13/80 R 20)Pil XLC		NA	2
	20 - **8.5**	215.9 8.5	45.7 **1.8**			R	12.00 R 20 X MINE D2		NA	2
						A	E 20 (13/80 R 20) Pil XLC		NA	2
	20 - **8.5 V**	216 8.5	44.4 **1.7**			A	12.00 R 20 X MINE D2		NA	2
						A	E 20 (13/80 R 20) Pil XLC		NA	2
	20 - **9.0**	228.6 9.0	48.3 **1.9**			A	12.00 R 20 X MINE D2		NA	2
						R	E 20 (13/80 R 20) Pil XLC		NA	2
	20 - **10.0**	254 10.0	50.8 **2.0**			A	E 20 (13/80 R 20) Pil XLC		NA	2
						R	14.00 R 20 X MINE D2		NA	0
	24 - **7.5**	190,5 7.5	**40,5** **1.6**	616,0	615,6	A	12.00 R 24 X MINE D2	G25	2	2
						A	12.00 R 24 XSM D2	G25	2	2
						A	12.00 R 24 XKA***	G25	2	2
	24 - **8.0**	203.2 8.0	43.2 **1.7**			A	12.00 R 24 ***	None		
						A	12.00 R 24 X MINE D2	G25	NA	2
	24 - **8.5**	215.9 8.5	45.7 **1.8**			R	12.00 R 24 ***	G25	NA	2
							12.00 R 24 X MINE D2			
	24 - **9.0**	228.6 9.0	48.3 **1.9**			A	14.00 R 24 non TG	G25	NA	0
						A	15.00 R 24 Pil	G25	NA	0
	24 - **10.0**	254 10.0	50.8 2.0			R	14.00 R 24 non TG	G25	NA	0
						R	15.00 R 24 Pil		NA	0
						R	385/95 R 24		NA	0

** R = Recommended - A = Allowed

COMPONENTS USED WITH MICHELIN EARTHMOVER TIRES

APPROVED RIMS FOR MICHELIN EARTHMOVER TIRES

Check that the rim support is at least the weight carried by the tire.

RIM TYPES	RIM DESIGN	F MM INCHES	H (13) MM INCHES	D (14) MM INCHES	RIM R/A(**)	TIRE SIZES	SEAL	TL	TT
5° TAPER BEAD SEAT RIMS (3 PIECES) 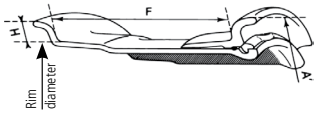	24 - **11.25/1.3**	286 11.3	33 **1.3**	616,0	A	385/95 R 24 X CRANE	G25	NA	0
	25 - **10.00/1.5**	254 10.0	38 **1.5**	635,0	R A	14.00 R 25 385/95 R 25	**Heupo** (OR 2-25)		
	25 - **11.25/1.3**	286 11.3	33 **1.3**		A A	14.00 R 25 385/95 R 25			
	25 - **11.25/2.0 IN**(*)	284 11.2	51 **2.0**		A R A	14.00 R 25 16.00 R 25 445/95 R 2	**Sulla** (OR 3-25)		
	25 - **12.00/1.3**	305 12.0	33 **1.3**		R R	15.5 R 25 385/95 R 25	**Heupo** (OR 2-25)		
	25 - **13.00/2.5 IN**(*)	330 13.0	63.5 **2.5**		R R	18.00 R 25 505/85 R 25	**Sulla** (OR 3-25)		
	25 - **14.00/1.3**	356	33		R	445/80 R 25	**Heupo** (OR 2-25)		
		14.0	**1.3**						
	25 - **14.00/1.5**	355 14.0	38 **1.5**		R A	17.5 R 25 445/80 R 25			
	25 - **15.00/3.0 IN**(*)	381 15.0	76 **3.0**		R	21.00 R 25	**Sulla** (OR 3-25)		
	25 - **17.00/1.7**	432 17.0	43 **1.7**		R R	20.5 R 25 * 550/65 R 25	**Heupo** (OR 2-25)		
					A	600/65R25 XLD 65			
	25 - **17.00/2.0 IF**(*)	432 17.0	51 2.0		R	20.5 R 25	**Sulla** (OR 3-25)		
					A A	525/80 R 25 **550/65 R 25**			
					A	600/65R25 XLD 65			
	25 - **19.50/2.5 IF**(*)	495 19.5	63.5 **2.5**		R	23.5 R 25			
					R	600/65 R 25 650/65 R 25 660/65 R 25			
	25 - **22.00/3.0 IF**(*)	559 22.0	76 **3.0**		R	26.5 R 25			
					R	650/65 R 25 660/65 R 25 750/65 R 25			
	25 - **25.00/3.5 IF**(*)	635 25.0	89 **3.5**		R	29.5 R 25			
					R	850/65 R 25			
CR RIMS 3-PIECE FOR CRANES 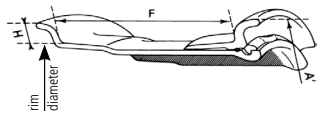	25 - **9.50/1.7 CR**	241 9.5	43 1.7	635	A	14.00 R 25	**Sulla** (OR 3-25)		
					A	385/95 R 25			
	25 - **11.00/1.7 CR**	279 11.0	43 1.7		A	16.00 R 25			
					A	445/95 R 25			
	25 - **14.00/1.7 CR**	355 14.0	43 1.7		A	17.5 R 25			
					A	445/80 R 25			
	25 - **17.00/1.7 CR**	432 17.0	43 1.7		A	20.5 R 25			
					A	525/80 R 25			
5° TAPER BEAD SEAT RIMS (5 PIECES) 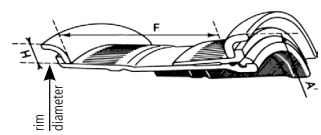	25 - **10.00/2.0**	254 10.0	51 2.0		A	505/85 R 25	**Sulla** (OR 3-25)		
	25 - **11.25/2.0 IN**(*)	284 11.2	51 2.0		A	14.00 R 25			
					R	16.00 R 25			
					A	445/95 R 25			
	25 - **13.00/2.0 IN**(*)	330 13.0	51 2.0		A	16.00 R 25			

** R = Recommended - A = Allowed

(*) New wheels have additional marking **IN**:
The IF flanges feature an Integrated Flange. They are 3-piece rims suited for radial tires.
The IN rims present a larger flange width and exist as 3-piece or 5-piece types.

COMPONENTS USED WITH MICHELIN EARTHMOVER TIRES

APPROVED RIMS FOR MICHELIN EARTHMOVER TIRES

Check that the rim support is at least the weight carried by the tire.

5° TAPER BEAD SEAT RIMS (5 PIECES)

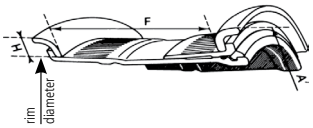

RIM TYPES	RIM DESIGN	F MM INCHES	H (13) MM INCHES	D (14) MM INCHES	RIM R/A(**)	TIRE SIZES	SEAL TL	SEAL TT
	25 - **13.00/2.5 IN**(*)	330 13.0	63.5 2.5	635	R	18.00 R 25	Sulla (OR 3-25)	
					R	505/85 R 25		
	25 - **15.00/2.5 IN**(*)	381 15.0	63.5 2.5		A	18.00 R 25		
					A	505/85 R 25		
	25 - **15.00/3.0 IN**(*)	381 15.0	76 3.0		R	21.00 R 25		
	25 - **17.00/2.0**	432 17.0	51 2.0		R	20.5 R 25		
					A	525/80 R 25		
					R	550/65 R 25		
					A	600/65R25 XLD 65		
	25 - **17.00/3.0**	432 17.0	76 3.0		A	21.00 R 25		
	25 - **19.50/2.0**	495 19.5	51 2.0		A	25/26 R 25		
	25 - **19.50/2.5**	495 19.5	63.5 2.5		R	23.5 R 25		
					R	600/65 R 25		
					R	650/65 R 25 660/65 R 25		
					R	660/65 R 25		
	25 - **20.00/2.0**	508 20.0	51 2.0		A	25/26 R 25		
	25 - **22.00/3.0**	559 22.0	76 3.0		R	26.5 R 25		
					R	650/65 R 25		
					R	660/65 R 25 750/65 R 25		
					A	750/65 R 25		
	25 - **24.00/3.0**	610 24.0	76 3.0		R	750/65 R 25		
	25 - **25.00/3.0**	635 25.0	76 3.0		R	750/65 R 25		
	25 - **25.00/3.5**	635 25.0	89 3.5		R	29.5 R 25		
					R	850/65 R 25		
	25 - **27.00/3.5**	687 27.0	89 3.5		A	850/65 R 25		
	29 - **22.00/3.0**	559 22.0	76 3.0	737	R	26.5 R 29	Sulky (OR 3-29)	
					A	30/65 R 29		
	29 - **24.00/3.0**	610 24.0	76 3.0		R	30/65 R 29		
					A	26.5 R 29		
	29 - **24.00/3.5**	610 24.0	89 3.5		A	29.5 R 29		
					A	800/65 R 29		
	29 - **25.00/3.5**	635 25.0	89 3.5		R	29.5 R 29		
	29 - **27.00/3.0**	687 27.0	76 3.0		R	800/65 R 29		
					R	875/65 R 29		
	29 - **27.00/3.5**	686 27.0	89 3.5		R	33.25 R 29		

** R = recommended - A = Allowed
(*) New wheels have additional marking **IN**:
The IF flanges feature an Integrated Flange. They are 3-piece rims suited for radial tires.
The IN rims present a larger flange width and exist as 3-piece or 5-piece types.

COMPONENTS USED WITH MICHELIN EARTHMOVER TIRES

APPROVED RIMS FOR MICHELIN EARTHMOVER TIRES

Check that the rim support is at least the weight carried by the tire.

5° TAPER BEAD SEAT RIMS (5 PIECES)

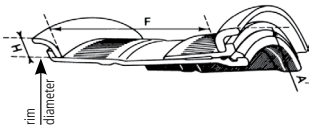

RIM TYPES	RIM DESIGN	F MM INCHES	H (13) MM INCHES	D (14) MM INCHES	RIM R/A(**)	TIRE SIZES	SEAL	TL	TT
	33 - **13.00/2.5 IN**(*)	330 13.0	63.5 2.5	838		18.00 R 33	**Strix** (OR 3-33)		
	33 - **15.00/3.0 IN**(*)	381.0 15	76.2 3.0		R	21.00 R 33			
	33 - **28.00/4.0**	711 28.0	101.5 4.0		A	33.5 R 33			
	33 - **28.00/3.5**	711 28.0	89 3.5		A	35/65 R 33			
	33 - **32.00/4.5**	813 32.0	114.5 4.5		R	37.5 R 33			
	35 - **15.00/3.0 IN**(*)	381 15.0	76 3.0	889	R	21.00 R 35	**Stras** (OR 3-35)		
	35 - **17.00/3.0**	432 17.0	76 3.0		A	21.00 R 35			
	35 - **17.00/3.5**	432 17.0	89 3.5		R	24.00 R 35			
	35 - **25.00/3.5**	635 25.0	89 3.5		R	29.5 R 35			
	35 - **27.00/3.5**	686 27.0	89 3.5		R	33.25 R 35			
					A	29.5 R 35			
	35 - **29.00/3.5**	737 29.0	89 3.5		A	33.25 R 35			
					A	37.25 R 35			
	35 - **31.00/4.0**	787 31.0	101.5 4.0		R	37.25 R 35			
	39 - **32.00/4.5**	813 32.0	114.5 4.5	991	R	37.5 R 39	**Fuodi** (OR 3-39)		
					R	40.5/75 R 39			
					A	45/65 R 39			
	39 - 36.00/4.5	914 36.0	114.5 4.5		R	45/65 R 39			
	45 - **36.00/4.5**	914 36.0	114.5 4.5	1143	R	45/65 R 39	**Réf. 1580** (OR 3-45)		
					R	45/65 R 45			
	49 - **17.00/3.5**	432 17.0	89 3.5	1245	R	24.00 R 49	**Heyco** (OR 3-49)		
	49 - **19.50/4.0**	495 19.5	101.5 4.0		R	27.00 R 49			
	51 - **22.00/4.5**	559 22.0	114.5 4.5	1295	R	30.00 R 51	**Réf. 1479** (OR 4-51)		
	51 - **24.00/5.0**	610 24.0	127 5.0		R	33.00 R 51			
	51 - **26.00/5.0**	660 26.0	127 5.0		R	36.00 R 51			

** R = Recommended - A = Allowed
(*) New wheels have additional marking **IN**:
The IF flanges feature an Integrated Flange. They are 3-piece rims suited for radial tires.
The IN rims present a larger flange width and exist as 3-piece or 5-piece types.

COMPONENTS USED WITH MICHELIN EARTHMOVER TIRES

APPROVED RIMS FOR MICHELIN EARTHMOVER TIRES

Check that the rim support is at least the weight carried by the tire.

RIM TYPES	RIM DESIGN.	F MM INCHES	H (15) MM INCHES	D (14) MM INCHES	RIM R/A(**)	TIRE SIZES	SEAL	TL	TT
5° TAPER BEAD SEAT RIMS (FROM 6 TO 8 PIECES) 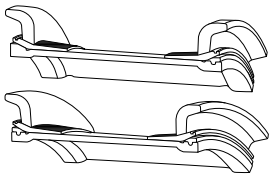	57 - **27.00/6.0**	686 27.0	152 6.0	1448	R	37.00 R 57	**Réf. 1481** (OR 4-57)		
	57 - **29.00/6.0**	736 29.0	152 6.0		R	40.00 R 57			
					A	37.00 R 57			
					A	50/80 R 57 XDR250			
	57 - **32.00/5.0**	813 32.0	127 5.0		A	40.00 R 57			
	57 - **32.00/6.0**	813 32.0	152 6.0		A	40.00 R 57			
					R	50/80 R 57 XDR250			
					A	50/80 R 57 XDR			
	57 - **32.00/6.5**	813 32.0	165 6.5		A	50/90 R 57			
	57 - **34.00/6.0**	863 34.0	152 6.0		A	50/80 R 57 XDR			
	57 - **42.00/5.0**	1067 42.0	127 5.0		A	55/80 R 57			
	57 - **44.00/5.0**	1117 44.0	127 5.0		A	55/80 R 57			
	57 - **47.00/5.0**	1194 47.0	127 5.0		A	60/80 R 57			
	63 - **36.00/5.0**	914 36.0	127 5.0	1600	A	53/80 R 63	**Réf. 2053** (OR 4-63		
	63 - **38.00/5.0**	965 38.0	127 5.0		A	53/80 R 63			
	63 - **41.00/5.0**	1041 41.0	127 5.0		A	55/80 R 63			
					A	56/80 R 63			
	63 - **44.00/5.0[6.0]**	1117 44.0	127 5.0		A	59/80 R 63			

** R = Recommended - A = Allowed

COMPONENTS USED WITH MICHELIN EARTHMOVER TIRES

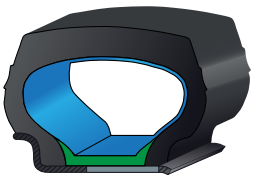

FLAP + TUBE SOLUTION

RIM & TIRE SIZE			FLAPS		TUBES			
RIM Ø (INCHES)	Ø WIDTH RIM RECOMMENDED (INCHES)	TIRE SIZE	DESCRIPTION	CAI	DESCRIPTION (PACKAGING)	VALVE TYPE	ETRTO / TRA REF.	CAI
15	5.5	"7.50 R 15 Compactor"	180 - 15	670236	7.00 - 15 / 7.50 - 15 MICHELIN Tube	SINGLE BEND	V3-02-2	812339
	6							
	6.00S							
	6.5							
	B6.5							
	6.5	"8.25 R 15 Mining - X Mine D2 MH - XZM"	180 - 15	670236	8.25 - 15 MICHELIN Tube	SINGLE BEND	V3-02-07	507246
	7							
20	6.5	"9.00 R 20 MH - XZM Mining - X Mine D2"	185 - 20	907771	8.25 - 20 MICHELIN Tube	SINGLE BEND	V3-02-10	732152
	B6.5							
	7.0T							
	7							
	B7.0							
	7.33V		200 - 20	299014				
	B7.5							
	7.5							
	7.33V	"E 20 Pilote (13/80 R 20) Compactor"	200 - 20	299014	11.00 - 20 / 12.00 - 20 MICHELIN Tube (V3-02-14)	SINGLE BEND	V3-02-14	179572
	7.5							
	B7.5							
	8							
	B8.0							
	8.0V							
	8.00V							
	8.5							
	B8.5							
	8.50V							
	9							
	9.00V							
	10							
	10.00V							
	8	"12.00 R 20 MH - XZM Mining - X Mine"	200 - 20	299014	11.00 - 20 / 12.00 - 20 MICHELIN Tube	SINGLE BEND	V3-02-14	179572
	8.5							
	B8.5							
	8.5V							
	8.50V							
	9							
	9.00V							

FOR VALVE TYPE DESCRIPTION, PLEASE REFER TO THE PAGE 158

COMPONENTS USED WITH MICHELIN EARTHMOVER TIRES

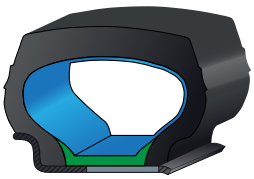

FLAP + TUBE SOLUTION

RIM & TIRE SIZE			FLAPS		TUBES			
RIM Ø (INCHES)	Ø WIDTH RIM RECOMMENDED (INCHES)	TIRE SIZE	DESCRIPTION	CAI	DESCRIPTION (PACKAGING)	VALVE TYPE	ETRTO / TRA REF.	CAI
24	9.00V	"14.00 R 24 XKA XKD1"	-	-		SINGLE BEND	V3-02-17	
	9							
	10.0/2.0							
	10.00W					SINGLE BEND	V3-02-3	
	9.00V	"14.00 R 24 XKA XKD1 XSM D2+"	-	-		SINGLE BEND	"V5-04-1 TRJ650"	
	9							
	10.0/2.0							
	10.00W							
25	10.00/1.5	14.00 R 25 XH D1 A	-	-	14.00 - 24 (Rubber King)	SINGLE BEND	"V5-04-1 TRJ650"	
	11.25/1.3							
	14.00/1.5	17.5 R 25	-	-	14.00 - 24 (Rubber King)	SINGLE BEND	"V5-04-1 TRJ650"	

FOR VALVE TYPE DESCRIPTION, PLEASE REFER TO THE PAGE 158

COMPONENTS USED WITH MICHELIN EARTHMOVER TIRES

EXPLANATION ON THE TUBE AND THE FLAP MARKINGS

EXPLANATION ON THE TUBE MARKINGS

Example 1: **24/25 V AM** example2: **25 YB AM**

The first two numbers indicate the bead seat (rim) diameter of the tire into which the tube can be fitted.

(In the first example, the tube may be fitted in 24- and 25-inch tires. In the second example, the tube may be fitted only in 25 inch tires).

The first letter corresponds to the section width of the tube (internal width of the tire).

This ranges from A to Z, with A being the smallest, and Z the largest (In the examples above, V and Y indicate that the tubes are designed for fitting into tires of relatively large section width.)

Sometimes, a second letter provides additional information (example 2); B, E, F and H indicate intermediate widths.

The third and fourth letters are an indication of the valve type.

AM indicates that the tube is fitted with an American valve base: R1946 (TRA SP4000) and a valve stem R1837 (TRJ 650).

D would indicate that the valve is offset. T would indicate a tractor tube fitted with an air-water valve, type TR 218A.

Explanation on valves and valve bases are given on subsequent pages.

EXPLICATIONS ON THE FLAP MARKINGS

Example 1: **14-24/25**

The first number indicates the total width of the flap when laid flat (includes height of edges), expressed in either millimeters or in inches.

In the example above, the width of the flap is 14 inches.

The second number indicates the rim diameter, or the tire bead seat (rim) diameter in inches, with which the flap is to be used.

In this example, the flap may be used with 24- and 25-inch tires.

Additional letters may be used to provide supplementary information.

For example, the significance of different letters is as follows: L–the edges are tapered, B–the flap has a reinforcing boss around the valve hole, S–the flap is reinforced, D–offset hole valve.

Example 2: **20 x 8.50 E**

The first number indicates the tire seat diameter, expressed in inches, with which the flap is to be used.

In this example, the flap may be used with 20-inch tires.

The second number indicates the overall width of the flap (width + height), in inches.

In this example, the overall width of the flap is 8.50 inches.

Letters correspond to the last generation of flaps.

COMPONENTS USED WITH MICHELIN EARTHMOVER TIRES



O-RINGS OR CORNER SEALS SOLUTION

FOR FITTING ON MULTI-PIECES RIMS

O-RINGS & CORNER SEALS DESCRIPTION					
RIM Ø (INCHES)	**TYPE**	**DESCRIPTION**	**MICHELIN REF.**	**CAI**	**PACKAGING**
For 16" rims	CORNER SEAL	16	R 1967	553026	30
		A-16 SPRAT	R 1014	553007	30
		E-16	R 1786	553024	30
For 20" rims	CORNER SEAL	A 20 TYRAN	R 1443	553004	30
		20	R 2050	553053	30
For 24" rims	CORNER SEAL	B 24/25	R 1528	553021	10
For tires 12.00 R 24 XMINE D2	CORNER SEAL	G 25 ICERU	R 1237	553012	30
For 20" rims in 3 pieces	O-RING	OR 6.6 - 20	R 1681	553215	20
For 21" rims	O-RING	OR 6.8 - 21	R 1506	553213	20
For 22.5" rims	O-RING	OR 22.5	R 2051	553054	10
For 25" rim in 3 pieces non IF or for 24" rim 10.00 VA	O-RING	OR 2-25 HEUPO	R 1438	553201	20
For 25" rim in 3 pieces IF or in 3 pieces CR for crane or in 5 pieces or for 24" rim 10.00 WA	O-RING	OR 3-25 SULLA	R 1437	553200	20
For 29" rims	O-RING	OR 3-29 SULKY	R 1439	553202	20
For 32" rims	O-RING	OR 2-32	R 2052	553055	20
For 33" rims	O-RING	OR 3-33 STRIX	R 1440	553203	20
For 35" rims	O-RING	OR 3-35 STRAS	R 1441	553204	20
For 39" rims	O-RING	OR 3-39 FUODI	R 1069	553206	20
For 45" rims	O-RING	OR 3-45	R 1580	553214	20
For 49" rims	O-RING	OR 3-49 HEYCO	R 1442	553205	10
For 51" rims	O-RING	OR 4-51	R 1479	553210	10
For 57" rims	O-RING	OR 4-57	R 1481	553211	10
For 63" rims	O-RING	OR 4-63	R 2053	553056	10

SEAL DESCRIPTION

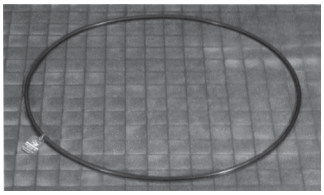

O-RING

Explanation of the sealing ring designation
The first number is the section diameter of the seal:
OR: Abbreviation of O-Ring
- imperial number: value expressed in 1/8 of inch (3 = 3/8)
- decimal number: value expressed in mm (6.6 = 6,6 mm)
The second number is the nominal bead seat diameter, expressed in inches.

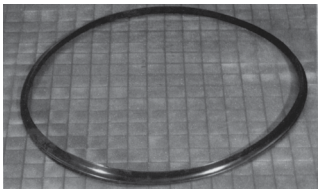

CORNER SEAL

Explanation of the corner seal designation
The letter indicates the profile of the seal.
The number is the nominal rim diameter, in inches.
Note: Approval for use of corner seals MUST BE obtained from Michelin.



Never reuse O-rings, valve seals or the valves themselves!

COMPONENTS USED WITH MICHELIN EARTHMOVER TIRES

VALVES AND ASSOCIATED ACCESSORIES FOR MICHELIN EARTHMOVER TIRES

In all cases, the valve cap is essential because it helps maintain the cleanliness of the mechanism and ensures air tightness of the valve.

CAR TUBE TYPE STRAIGHT VALVE

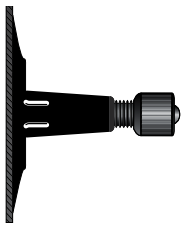

VALVE MARKINGS

The valve is circular and is marked in accordance with ETRTO standards, starting at the top of the valve, and in the following order:
- NAME (or trademark) of the valve manufacturer and his reference number.
- ETRTO reference number.

Michelin code	ETRTO code	Valve code	Valve hole ø in mm
611	V2-01-2	TR 15	16
746	V2-01-1	TR 13	11.5

FITTING A UNIVERSAL VALVE ON A MICHELIN® TUBE WITH A VALVE BASE

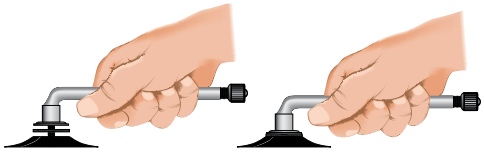

1 - Position the sealing ring on the valve.
The sealing ring must be clean and dry.
2 - Hand tighten the valve until it just touches the sealing ring.
3 - Tighten the valve for a further two turns.
4 - To orientate the valve in the desired position, tighten further.

IMPORTANT: Never unscrew the valve to the desired position.

Note: Do not exceed the tightening guidelines given above. Do not forget to replace the valve cap to prevent dirt ingress and to ensure air tightness.

SMALL TRUCK, UNIVERSAL STRAIGHT VALVE

Fitted to MICHELIN® tubes for the occasional equipment Tube-Type on 5° and 15° non U taper drop center rim.

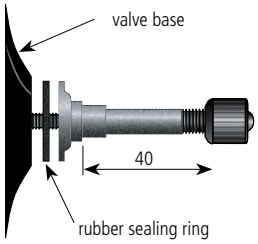

Michelin code	ETRTO code	Valve hole ø in mm	A	
			mm	inches
1964	/	9.7	40	1.57

TRUCK-TYPE, UNIVERSAL SINGLE-BEND VALVE

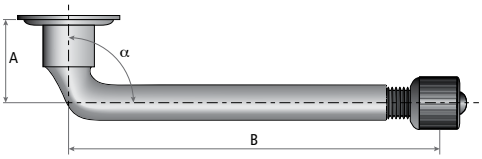

Michelin code	ETRTO code	A		B		α°
		mm	pouces	mm	inches	
570	V3-02-2	22.5	0.89	43	1.69	120
576	V3-02-3	33	1.30	44.5	1.75	95
577	V3-02-4	39.5	1.56	44.5	1.75	110
752	V3-02-17	20.5	0.81	156.5	6.16	90
1158	V3-02-14	20.5	0.81	138.5	5.45	94

TRUCK-TYPE, UNIVERSAL TRIPLE-BEND VALVE

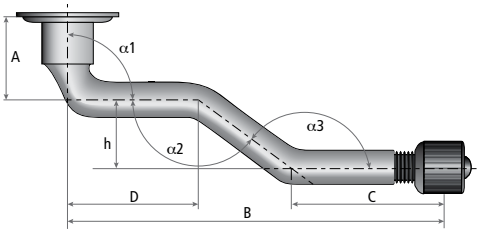

Michelin code	ETRTO code	α1°	α2°	α3°
582	V3-06-5	90	139	139

A		B		C		D	
mm	inches	mm	inches	mm	inches	mm	inches
20.5	0.81	131	5.16	49	1.93	62.5	2.46

COMPONENTS USED WITH MICHELIN EARTHMOVER TIRES

TYPES OF TUBELESS EARTHMOVER VALVES

VALVE TYPE A1

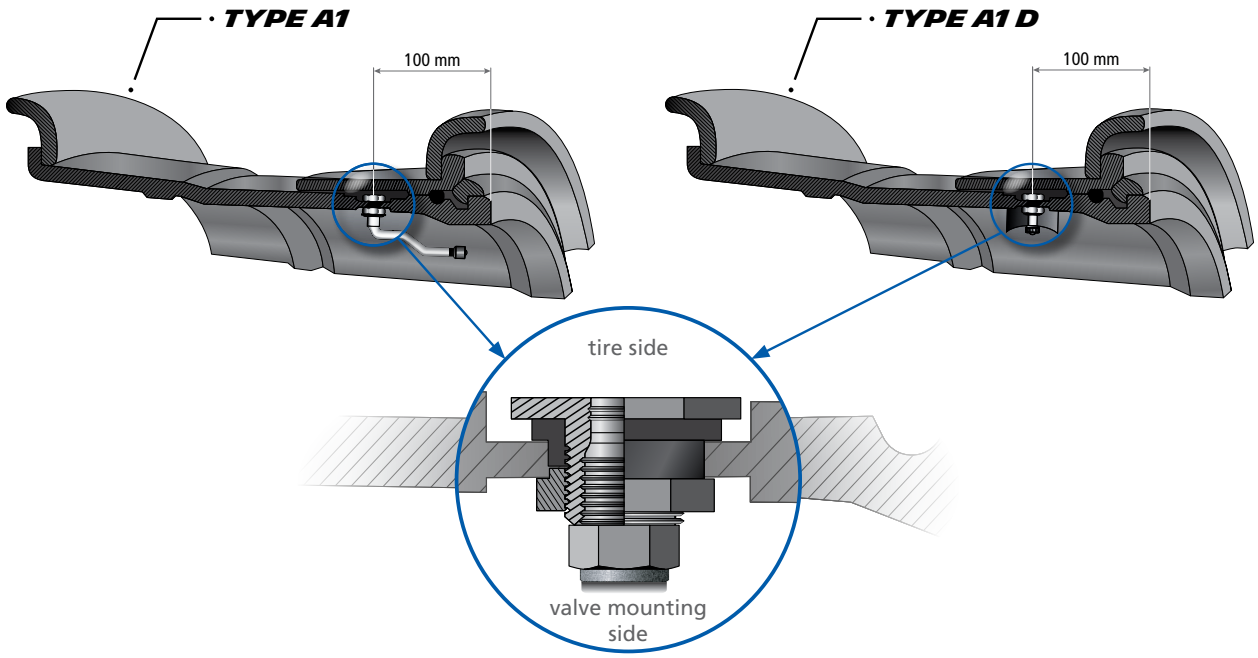

VALVE COMBINATION TYPE A4
Comprised of two TYPE A1 valves, both set at 100 mm from the rim edge, to enable water filling.

VALVE TYPE A2

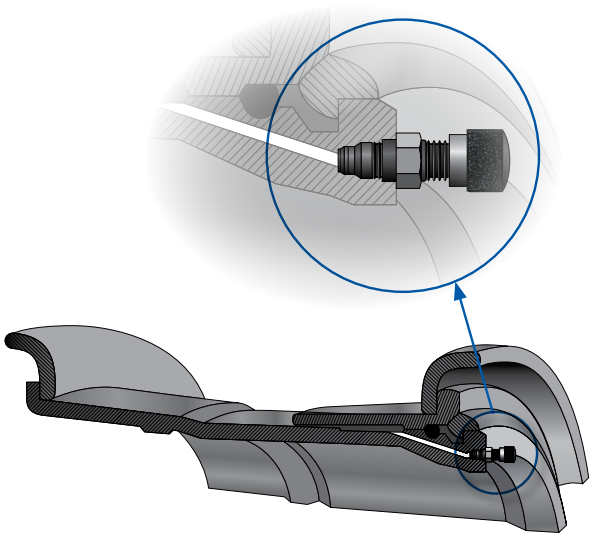

VALVE TYPE A3

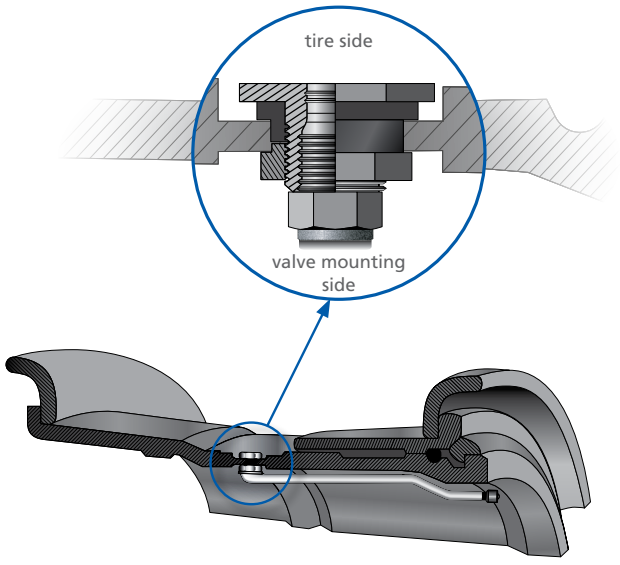

COMPONENTS USED WITH MICHELIN EARTHMOVER TIRES

AIR AND WATER TUBELESS VALVES, AMERICAN TRA STANDARD

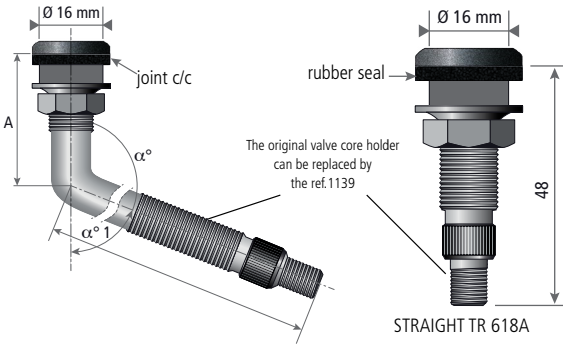

TRA code	ETRTO designation	A		B		α°
		mm	inches	mm	inches	
TR 618 A	V5-01-1	47.5	1.87	-		-
TR 621 A	V5-02-1	39	1.54	76	2.99	115°
TR 622 A	V5-02-2	44.5	1.75	117	4.61	90°
TR 623 A	V5-02-3	39	1.54	57	2.24	115°

Valves for 15.7 mm (0.6-inch) diameter hole

EARTHMOVER TUBELESS VALVE (AMERICAN TRA STANDARD)

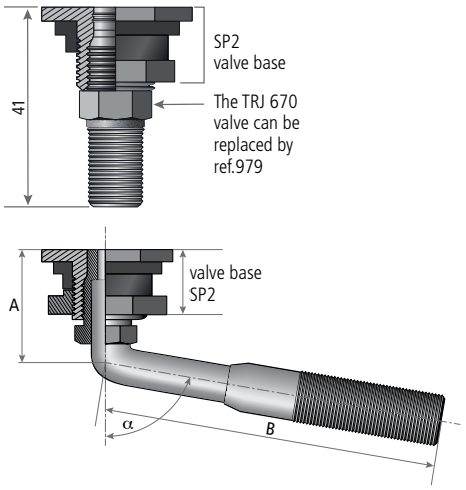

Michelin code	TRA code	ETRTO designation	A		B		α°
			mm	inches	mm	inches	
R 1837	TRJ 650	V5-04-1	27	1.08	79	3.12	100°
	TRJ 651	V5-04-2	32	1.27	119	4.69	90°
	TRJ 652		27	1.08	140	5.5	94°
	TRJ 653		27	1.08	63	2.5	100°
	TRJ 654		27	1.08	79	3.12	120°
	TRJ 655		27	1.08	79	3.12	106°
	TRJ 656		67	2.62	94	3.69	90°
	TRJ 657		27	1.08	102	4	100°
	TRJ 658		27	1.08	140	5.5	100°
	TRJ 659		48	1.89	89	3.5	90°
	TRJ 660		48	1.89	222	8.75	90°
	TRJ 669		27	1.08	64	2.5	90°
R 979	TRJ 670		41	1.63	-	-	-

Valves used on an American valve base SP2 [20.5 mm (0.8-inch) diameter hole] and also on AM tubes.

STRAIGHT, LARGE-BORE VALVES

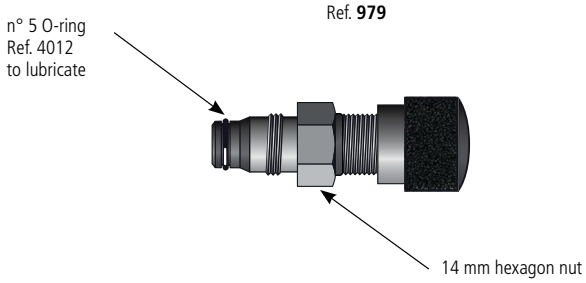

Used with **Type A2** rim contour or with **SP2 base (may also replace TRJ 670).**

COMPONENTS USED WITH MICHELIN EARTHMOVER TIRES

SINGLE-PIECE VALVES (20,5 mm valve hole)

TRA code	A		B		C		D		H		α°
	mm	inches	mm	inches	mm	inches	mm	inches	mm	inches	
TRJ 690	16	0.63	119	4.69	32	1.26	27	1.06	14	0.55	28
TRJ 691	16	0.63	84	3.31							18
TRJ 693	16	0.63	127	5.00					25	0.98	

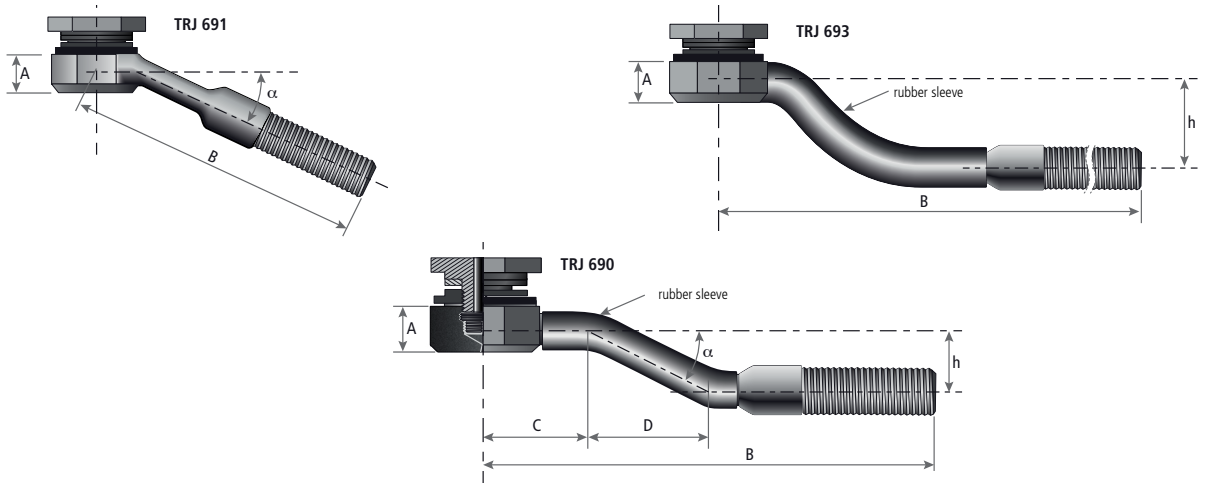

AIR AND WATER TUBELESS, STRAIGHT RUBBER VALVES

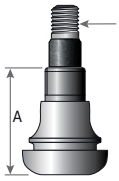

The original valve core holder can be replaced by Ref. 1139

A mm/inches		Designation
35	1.38	35 GSW 15.7

Valves for 15.7 mm (0.6-inch) diameter hole

Caution! Don't use this valve with pressures higher than 4,5 bar.

VALVE BASE

ACTUAL VALVAGE
(mounting with tube)

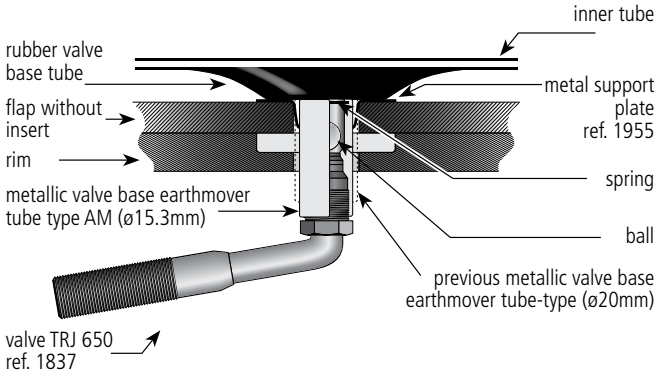

AIR AND WATER AGRICULTURAL-TYPE VALVE BASE
Allows tire to be water-filled.
Valve with core holder 1139 and plastic nut ref. 1225

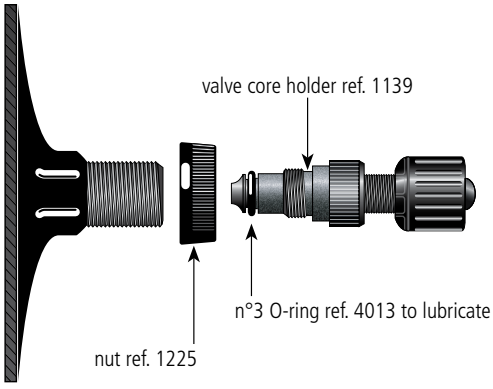

ref. **1224** code TR 218A

HELP WITH THE USE OF EARTHMOVER TIRES

MICHELIN EARTHMOVER TIRES FOR TRANSPORT MACHINES

DETERMINING INFLATION PRESSURES

- **Determine** the maximum load on each tire by weighing.

This is the only way that tire pressures can be set accurately for optimum performance.

If it is not possible to weigh the machine, determine the maximum load per tire on each axle by calculation or by using the machine manufacturer's data.

The following data needs to be established:
- The Gross Vehicle Weight (total machine weight in the laden condition).
- The percentage load distribution by axle.

- **Calculate** the load per axle, then determine the tire weight by dividing the axle load by the number of tires per axle.
- **Use** the tables *Tire Loads and Pressures* for TRANSPORT in the MICHELIN® Earthmover Data Book.

This method applies to the following machine tires:
Rigid Dump Trucks
Articulated Dump Trucks
Bottom Dump Trucks
Motor Scrapers
Site Dump Trucks

· RIGID DUMP TRUCKS

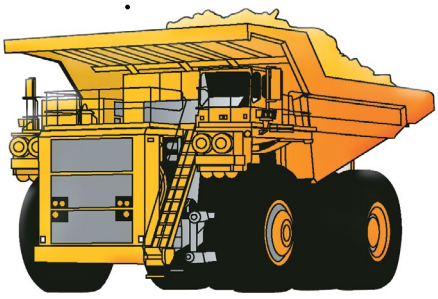

· ARTICULATED DUMP TRUCKS

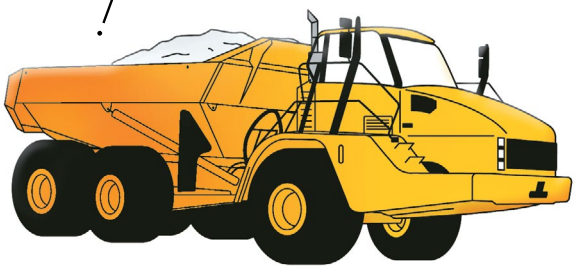

· BOTTOM DUMP TRUCKS

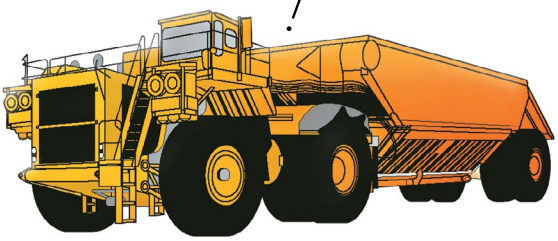

· MOTOR SCRAPERS

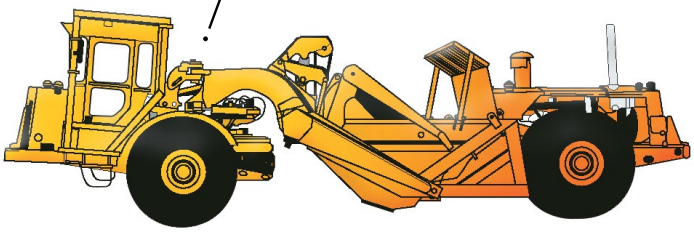

HELP WITH THE USE OF EARTHMOVER TIRES

MICHELIN EARTHMOVER TIRES FOR MOBILE CRANES, SPECIAL APPLICATIONS, RAPID INTERVENTION VEHICLES (CIVIL AND MILITARY)

DETERMINING INFLATION PRESSURES

- **Determine** the maximum load on each tire by weighing
- By using the machine manufacturer's data, or
- By weighing each axle.

- **Calculate** the load per tire (in the case of a crane, divide the total weight by the number of axles, and divide by the number of tires per axle).

- **Use** the tables *Tire Loads and Pressures* for CRANES to determine the tire pressures.
- In the case of use of tires on special machines, please consult your Michelin® Representative.
- Tyres are made from different types of materials that have the properties which are essential for the tyre to perform properly. These properties may change over time. These changes depend on numerous factors such as the storage conditions, usage and, in particular, the load, speed, tyre pressure, maintenance, weather conditions etc. to which the tyre is subjected throughout its useful life. These factors impact a tyre's service life.
The design of Michelin tyres is intended to deliver long lasting performance and ensure that the machine remains operational for the longest possible periods.
If we take a look at the conditions of use of mobile cranes, we see a reduction in the average distance travelled every year. As a result, the tyres stay fitted to the cranes for a longer period of time.
Accordingly, Michelin recommends that the service life of mobile crane tyres be limited to a maximum of 10 years.

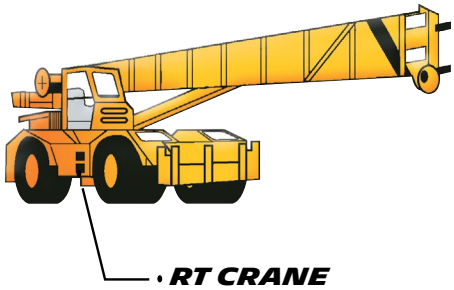

• RT CRANE

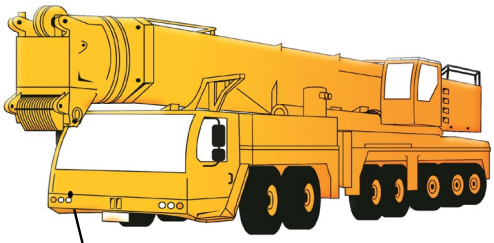

• AT CRANE

MICHELIN EARTHMOVER TIRES USED IN DESERT AND SIMILAR CONDITIONS

These tires are used on machines that are operated in special conditions, such as sand, desert regions, etc.

Two speed limits are applied to the tires according to the type of work.
- A limit for use on sand and hard track.
- A higher limit for road use with no particular problem of grip or accidental damage.

INFLATION PRESSURES

For a given load, the inflation pressure depends on the rolling condition
- Road
- Track
- Sand

Refer to the table load/pressure corresponding to the selected type of driving.
After using *sand* pressures, they must be adjusted to the correct pressure for subsequent conditions of use (road or track).

HELP WITH THE USE OF EARTHMOVER TIRES

MICHELIN EARTHMOVER TIRES FOR WORKING MACHINES: SURFACE LOADERS IN REHANDLING, PRODUCTION, EXTRACTION AND FACEWORK

BASE PRESSURES

The base pressures designate the necessary pressure for the load carried.

There are two ways to determine the base pressures of a loader.





BY WEIGHING THE MACHINE AXLES

- **Determine** the maximum load on each tire by weighing.
- **Use** the tables *Tire Loads and Pressures* for LOADERS from the MICHELIN® Technical Data Book.
  Front Laden: for the laden front axle(bucket full)
  Rear Unladen: for the unladen rear axle(bucket empty)

BY CALCULATION, USING THE MACHINE MANUFACTURER'S DATA

- **Determine** the maximum load on each tire from the axle loads (bucket empty/full) data by the manufacturer.
- **Use** the tables *Tire Loads and Pressures* for LOADERS from the MICHELIN® Technical Data Book.
  Front Laden: for the laden front axle(bucket full)
  Rear Unladen: for the unladen rear axle(bucket empty)

ADJUSTMENTS OF THE BASE PRESSURE

To improve stability, the following adjustments are possible:

Front axle: For a given load, it is possible to increase tire pressure by 1 bar compared to the pressure determined by the methods presented above.

On the rear axle, it is recommended to use a pressure of 70% of the recommended value for the front axle.

These adjustments shall be made within the limits shown on page 148.

Important

During long road trips (delivery, transfer from one site to another), special precautions are necessary.

For more information, please consult your Michelin Representative.

MICHELIN EARTHMOVER TIRES IN BLOCK HANDLING APPLICATION

The block handling usage is very specific, both recommendations and usage conditions listed below must be respected at all times:

- Always fit the tire on heavy duty wheels / reinforced flanges
- Always inflate the tire to 9 bar (130 psi) cold pressure
- Inspect the tire weekly by qualified personnel:
  - Pressure check
  - Visual inspection of the bead zone. If any deformation is detected , it is mandatory to remove the tire immediately
- Usage of chains is authorized
- Remove the tire after using it up to a maximum of 4 years within this application

Description	CAI/MSPN	Load per tire kg (lbs)	Pressure (bar) (PSI)	Max. dist./hour	% of use
XTXL E4**** L4**** 229A2 35/65R33 Tubeless	845075 46729	≤ 32500 (71500)	9 (130)	10 km - 6.2 mi	-
		≤ 45000 (99000)	9 (130)	4 km - 2.4 mi	-
		≤ 80000 (176000)	9 (130)	stationary	Max 10%
XTXL E4 **** L4 *** 221A2 29.5 R 25 Tubeless	427926 40734	≤ 25750 (56500)	9 (130)	12 km - 7.4 mi	-
		≤ 35000 (77000)	9 (130)	4 km - 2.4 mi	-
		≤ 63000 (138500)	9 (130)	stationary	Max 10%

HELP WITH THE USE OF EARTHMOVER TIRES

MICHELIN EARTHMOVER TIRES FOR WORKING MACHINES: DOZERS

HOW TO CALCULATE INFLATION PRESSURES



Depending on the type of work, tires on a dozer are subjected to different types of loading.

- The load on the Front Axle is at the maximum when loading (pushing) a scraper.
- The load on the Rear axle is at the maximum when dozing or while stockpiling.

From a practical point of view, the maximum load on either of the two axles is approximately equal to 2/3 of the machine weight.

- **Use this method** to determine the load on each tire.
- **Use** the tables *Tire Loads and Pressures* for LOADERS for the Rear Unladen.

MICHELIN EARTHMOVER TIRES FOR WORKING MACHINES: GRADERS

HOW TO CALCULATE INFLATION PRESSURES

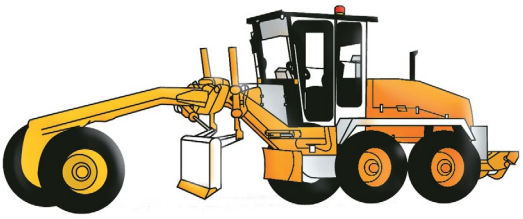

As a general rule, the minimal inflation pressure recommendation must never be lower than 2 bar (29 psi)

- **Weigh the machine** to find out the load on each axle or use the loads given by the machine manufacturer.
- **Use** the tables *Tire Loads and Pressures* for GRADERS

For special work (example: sloping embankments), the inflation pressure should never be lower than 2.5 bar (36 psi).

HELP WITH THE USE OF EARTHMOVER TIRES

MICHELIN EARTHMOVER TIRES FOR COMPACTORS

XLC TIRES

The tire and the working pressure depend on the material to be compacted, the type of work to be carried out and the operating speed.

Please refer to the information and operating guidelines supplied by the machine manufacturer and use the tables *Tire Loads and Pressures* for COMPACTORS from the earthmover technical data book.

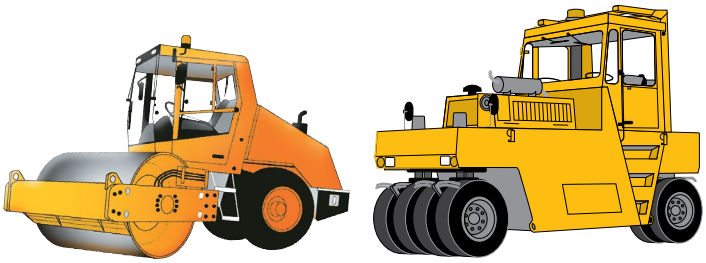

MICHELIN EARTHMOVER TIRES FOR ROADBUILDING MACHINERY (PLANERS, STABILIZER MIXERS, PAVERS)



There are no tires made specifically for this type of machinery.
Tires should be chosen according to their average speed capabilities in relation to those of the machine and their load capacity.

All these machines operate at 2 speeds: a "transport" or "traveling" speed and a "work" speed.

Once the load per tire has been determined, refer to the load/pressure table which corresponds best to the speed at which the selected tire is to be used.

When we determine the tire pressure in these two cases, we consistently apply the highest pressure. This is often pressure "transport."

HOW TO CALCULATE THE LOAD PER TIRE

If the load per axle is not known (no machine manufacturer's information available and no possibility of a physical weighing), follow the instructions below.

TRAVELING MACHINES:

For Cold Planers and Stabilizer Mixers: Load per axle on pneumatic tires = 50% of machine weight.
For Pavers: Load per axle on pneumatic tires = 80% of machine weight/number of axles.

LOADED/WORKING MACHINES:

For Cold Planers and Stabilizer Mixers: Load per axle = 50% of machine weight + payload.
For Pavers: Load per axle on pneumatic tires = 30% machine weight + maximum load of the container bin/number of axles.

HELP WITH THE USE OF EARTHMOVER TIRES

MICHELIN EARTHMOVER TIRES FOR UNDERGROUND MACHINES

HOW TO CALCULATE INFLATION PRESSURES

TRANSPORT MACHINES

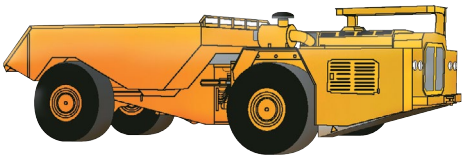

- **Determine** the maximum load on each tire, of each axle, with the machine loaded
  - By calculation, using the machine manufacturer's data, or
  - By weighing each tire position with the machine loaded.
- **Use** the tables *Tire Loads and Pressures* for MINE TRANSPORT.

LOADERS

Apply the methods used for surface loaders (see the previous pages Chapter MICHELIN® Earthmover Tires for Working Machines: Surface Loaders).

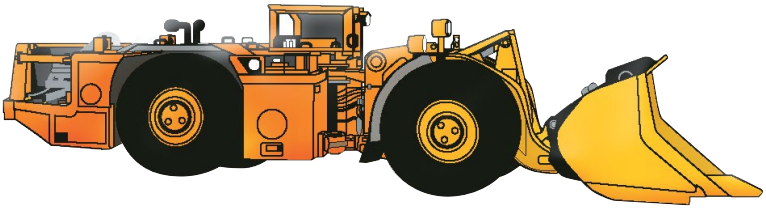

BOLTERS, BORERS, SCALERS AND OTHER SERVICE MACHINES

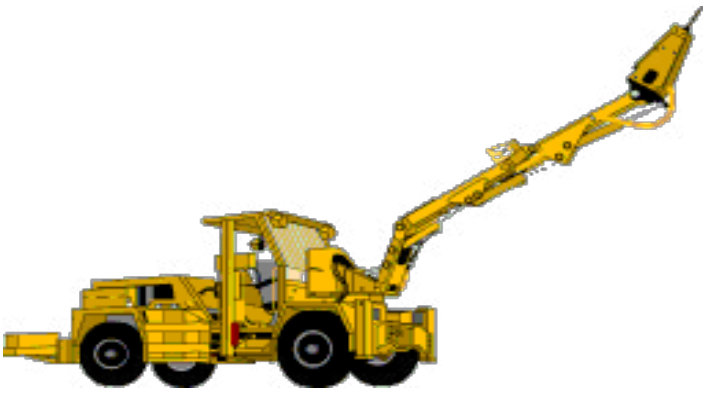

TIRES FOR TRANSPORT MACHINES: TKPH (TMPH) METHOD

FACTORS TO BE CONSIDERED WHEN SELECTING THE MOST APPROPRIATE TIRE:



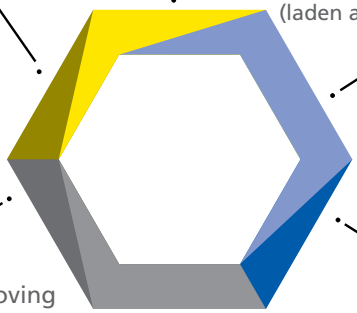

CHOOSING THE IDEAL TIRE

This will depend on:
- The fitment possibilities offered by the machine manufacturer
- The service conditions on the site Factors such as load, speed, surface conditions, etc. must be considered

THE MACHINE

- The tire sizes
- The loads the tires have to carry (laden and unladen)

THE SITE

- Type of surface, condition and profile of haul roads
- Type and condition of loading and tipping areas

TIRE BEHAVIOR

- How are the tires wearing?
- What are the main reasons for removing a tire from service?
- Are there sidewall or tread problems?

MACHINE OPERATION ON THE SITE

- Length of the cycle (laden trip/unladen trip)
- Maximum number of cycles during a working period or shift
- Duration of the working period or shift

PROBLEMS THAT MAY ARISE

- How does the machine/tire combination behave? (For example, traction)

TKPH (TMPH) definition:
The TKPH (Ton Kilometer Per Hour) or TMPH (Ton Mile Per Hour) is an expression of the working capacity of a tire.

The TKPH (TMPH) is a function of the maximum allowed internal operating temperature of a tire.

TIRE TKPH OR TIRE TMPH

A tire's TKPH (TMPH) depends on its design and varies according to size and type.

TKPH (TMPH) values are given along with other MICHELIN® tire characteristics.

It is a function of load and the number of kilometers (miles) covered per hour at an ambient temperature of 38 °C (100° F).

The formula to convert a TKPH rating to a TMPH rating is:
TMPH = TKPH x 0,685

TMPH calculation is based on the "short ton" which corresponds to 2,000 lbs or 907 kg.

BASIC SITE TKPH OR TMPH

This value reflects the specific requirements of a site and can be obtained by using the following formula:

Basic site TKPH (basic site TMPH) = Qm x Vm

Where Qm = average load per tire

Vm = average cycle speed, in km (or miles) per hour

AVERAGE LOAD PER TIRE (QM)

Average load per tire (Qm):

$$Qm = \frac{Qc + Qv}{2}$$



where Qc = is the load per tire in ton (TKPH), or in short ton (TMPH), on a laden vehicle.

Qv = is the load per tire in ton (TKPH), or in short ton (TMPH), on an unladen vehicle.

The Qm calculation should theoretically be made for each tire. However, in practice, specific tire loads are not normally available; therefore, this leads to the assumption that each tire on the same axle carries an equal load. When calculating the average load per tire on the front and the rear axles, the greatest value of Qm shall be used in TKPH (TMPH) calculation.

In most cases, on two-axle dump trucks, the distribution of the total load of the loaded vehicle (unladen weight + payload) corresponds to 33.3% on the front axle (single tires) and 66.7% on the rear axle (twinned tires).

When unladen, the front axle is almost always the heaviest.

Thus, the maximum Qm, will nearly always be on the front axle.

Caution: Ensure that load distribution Front/Rear is even

Of course, the analysis of the site (or at least, the collected information), weighings and machine characteristics, will provide the information to define and check the load per tire.

THE NUMBER OF KM (OR NUMBER OF MILES) COVERED ON THE REFERENCE CYCLE



This is obtained by using the relationship:

$$Vm = \frac{L}{H}$$



Where L = is the cycle length in kilometers (TKPH), or in miles (TMPH).

The reference cycle must be the one with the highest average speed.

H = is the duration of cycle in hours.

REAL SITE TKPH OR REAL SITE TMPH

The Qm x Vm formula is used to calculate the basic site TKPH (or TMPH).

To obtain the real site TKPH (or TMPH), two more factors must be taken into account:

- The length of cycles exceeding 5 kilometers (or 3 miles)
- The ambient temperature

CYCLE LENGTH–K1 COEFFICIENT

For cycle lengths exceeding 5 kilometers (or 3 miles) apply to the basic site TKPH (or basic site TMPH) the K1 coefficient, the values of which are given on following pages.

SITE AMBIENT TEMPERATURE (TA) - K2 COEFFICIENT

The standard ambient temperature is 38 °C (100° F). For a given speed, a site temperature higher than 38 °C increases the real site TKPH (or TMPH). Conversely, a temperature lowers than 38 °C (100° F) decreases the real site TKPH (or TMPH).

The K2 coefficient:

Where Vm is the reference cycle average speed on the site in km/h for TKPH and in mph for TMPH,

TA is the ambient temperature, in °C for TKPH and in °F for TMPH

TR is the reference temperature (38 °C for TKPH and 100° F for TMPH)

Is to apply to the basic site TKPH (basic site TMPH).

Its calculation depends on whether the ambient temperature of the basic site is above or below 38 °C (100° F).

if **TA < 38 °C** (100° F)

$$K2 = \frac{1}{1 - \frac{[\ 0{,}25^{*} \times (TA - TR)\ ]}{Vm}}$$



(: Use 0.086 instead of 0.25 when calculating basic site TMPH)*

If **TA > 38 °C** (100° F)

$$K2 = \frac{1}{1 - \frac{[\ 0{,}40^{*} \times (TA - TR)\ ]}{Vm}}$$



(: Use 0.138 instead of 0.40 when calculating basic site TMPH)*

The ambient temperature of the site (TA) to be taken into account is "the maximum temperature in the shade" during the hottest period.

For temperatures TA greater than 15 °C (59° F), use the K2 coefficients shown on the following pages.

For temperatures TA lower than 15 °C (59° F), use the K2 coefficients shown in the shaded area of the table on the following pages.

To sum up, for the real site TKPH (TMPH) calculation, proceed as follows:

- Calculate the basic site TKPH (TMPH).
- Calculate the correct for cycle length exceeding 5 kilometers (3 miles) by applying the K1 coefficient.
- Calculate the correct for ambient temperatures not equal to 38 °C (100° F) by applying the K2 coefficient.

Real site TKPH (or TMPH) = Basic site TKPH (or basic site TMPH) x K1 x K2

COMPARISON OF THE TIRE TKPH (TMPH) AND REAL SITE TKPH (TMPH)

On the basis that the choice of tread pattern is made to meet the needs of traction, protection and speed, there are 2 possibilities:

a) The tire's TKPH (TMPH) is greater than the real site TKPH (TMPH): the tire is suitable for the application.

b) The tire's TKPH (TMPH) is below the real site TKPH (TMPH): the tire is not suitable for the application.

In case b:

- Check if another tread pattern or type may be used.
- See if a modification of operating conditions is possible (reduction of load and/or reduction of speed, reduced number of cycles in the same time period, etc.).

EXAMPLE OF A SITE TKPH (TMPH) CALCULATION



The data to calculate the real site TKPH (TMPH) where a RDT is fitted with 37.00 R 57 tire is as follows:

- Well-kept but abrasive haul roads;
- Average payload: 180 tons (198.5 short ton); mine value
- Reference cycle: 21 km (12.8 miles);
- Unladen weight–Front: 64 tons (70.6 short ton)
- Duration of cycle: 1 hour 15 minutes ; H = 1 +(15/60) = 1,25 hour;
- Unladen weight–Rear: 57 tons (62.8 short ton)
- Ambient temperature: TA = 42 °C (107.6 °F);
- Distribution of total laden weight: Front = 33.3% Rear = 66.7%

CALCULATION OF QM (AVERAGE TIRE LOAD)

	(TKPH)	(TMPH)
- Gross Vehicle Weight (GVW)	180 + 64 + 57 = 301 tons	198.5 + 70.6 + 62.8 = 332 short tons
- Unladen weight per tire–Front; Qv:	$\frac{64}{2}$ = 32 tons	$\frac{70,6}{2}$ = 35 short tons
- Laden weight per tire–Front; Qc: *(33.3% of GVW on front axle)*	$\frac{301 \times 33.3}{2 \times 100}$ ~ 50 tons	$\frac{332 \times 33.3}{2 \times 100}$ = 55 short tons
- Average tire load, Qm Front:	$\frac{32 + 50}{2}$ = 41 tons	$\frac{35 + 55}{2}$ = 45 short tons
- Unladen weight per tire–Rear; Qv:	$\frac{57}{4}$ = 14 tons	$\frac{62,8}{4}$ = 15.5 short tons
- Laden weight per tire–Rear; Qc: *(66.7% of GVW on rear axle)*	$\frac{301 \times 66.7}{4 \times 100}$ ~ 50 tons	$\frac{332 \times 66.7}{4 \times 100}$ = 55 short tons
- Average tire load, Qm–Rear:	$\frac{14 + 50}{2}$ = 32 tons	$\frac{15.5 + 55}{2}$ = 35 short tons
Thus, the value for Qm to be used will be:	**41 tons**	**45 short tons**

CALCULATION OF VM (DISTANCE COVERED PER HOUR)

$Vm = \frac{L}{H}$	$\frac{21}{1,25}$ = **16.8 km** in one hour	$\frac{12.8}{1,25}$ = **10.2 miles** in one hour

BASIC SITE TKPH (TMPH)

TKPH (TMPH) = Qm x Vm	41 x 17 = **689**	45 x 10,6 = **459**

CALCULATION OF K1 COEFFICIENT

Beyond 5 km/h, the cycle length has an influence on the real site TKPH.

The cycle is greater than 5 km (3 miles), the coefficient K1 corresponding to 21 km (12.8 miles) which is the reference cycle starts, is: **1.19** (value on next page) for the calculation of TKPH and TMPH.

VALUE OF THE K2 COEFFICIENT

Ambient temperatures different of 38 °C (100° F) has an influence on the real site TKPH.

You can use the table on the opposite page, to find the K2 coefficient (in TKPH units), by interpolation for your actual reference cycle average speed and ambient temperature. In this case, for Vm = 17 km/h (10.6 mph) and TA = 42 °C (107.6° F), we find K2 = 1.105

CALCULATION OF THE K2 COEFFICIENT

In our example, the ambient temperature is 42 °C (107.6° F). The calculation of the coefficient K2 is as follows:

$K2 = \frac{1}{1 - \frac{[\,0,40^* \times (TA - TR)\,]}{Vm}}$	$\frac{1}{1 - \frac{[\,0,40^* \times (42 - 38)\,]}{16.8}} = 1.105$	$\frac{1}{1 - \frac{[\,0,138^* \times (107.6 - 100)\,]}{10.2}} = 1.114$

(: Use 0.138 instead of 0.4 for the calculation of TMPH)*

REAL SITE TKPH (TMPH)

Applying the K1 and K2 coefficients to the basic site TKPH (TMPH) gives the real site TKPH (TMPH).

	689 x 1.19 x 1.105 = **906**	459 x 1.19 x 1.114 = **608**

TIRE TKPH (TMPH)/REAL SITE TKPH (TMPH) COMPARISON

In the 37.00 R 57 XDR® size	the different tire TKPH values are: B4 = 848 B = 1018 C4 = 1145 C = 1272	the different tire TMPH values are: B4 = 581 B = 698 C4 = 784 C = 871

In our example, the B4 type is not suitable. All other types of compound are possible.
The tracks being abrasive and the loading and unloading areas being aggressive, the choice will be the B type.

MICHELIN EARTHMOVER TIRES FOR TRANSPORT MACHINES
K COEFFICIENT CALCULATED AND USED FOR THE TKPH (TMPH) METHOD



K1 COEFFICIENTS

L (km)	L (ml)	K1	L (km)	L (ml)	K1	L (km)	L (ml)	K1	L (km)	L (ml)	K1	L (km)	L (ml)	K1
			11	6.8	1.13	21	13	1.19	31	19.3	1.21	41	25.5	1.23
			12	7.4	1.14	22	13.7	1.19	32	19.9	1.21	42	26.1	1.23
			13	8	1.15	23	14.3	1.20	33	20.5	1.22	43	26.7	1.23
			14	8.7	1.16	24	14.9	1.20	34	21.1	1.22	44	27.3	1.23
5	3.1	1.00	15	9.3	1.16	25	15.5	1.20	35	21.7	1.22	45	28	1.23
6	3.7	1.04	16	9.9	1.17	26	16.2	1.20	36	22.4	1.22	46	28.6	1.23
7	4.3	1.06	17	10.6	1.17	27	16.8	1.21	37	23	1.22	47	29.2	1.23
8	5	1.09	18	11.2	1.18	28	17.4	1.21	38	23.6	1.22	48	29.8	1.23
9	5.6	1.10	19	11.8	1.18	29	18	1.21	39	24.2	1.22	49	30.4	1.23
10	6.2	1.12	20	12.4	1.19	30	18.6	1.21	40	25	1.22	50	31	1.23

L = Cycle length in kilometers and in miles.

K2 COEFFICIENTS

Vm Km (miles)	Ambient temperature 15 °C 59° F	17,5 °C 63.5° F	20 °C 68° F	22,5 °C 72.5° F	25 °C 77° F	27,5 °C 81.5° F	30 °C 86° F	32,5 °C 90.5° F	35 °C 95° F	37,5 °C 99.5° F	40 °C 104° F	42,5 °C 108.5° F	45 °C 113° F	47,5 °C 117.5° F	50 °C 122° F
10 (6)	0.635	0.661	0.690	0.721	0.755	0.792	0.833	0.879	0.930	0.988	1.087	1.220	1.389	1.613	1.923
12 (7)	0.676	0.701	0.727	0.756	0.787	0.821	0.857	0.897	0.941	0.990	1.071	1.176	1.304	1.463	1.667
14 (9)	0.709	0.732	0.757	0.783	0.812	0.842	0.875	0.911	0.949	0.991	1.061	1.148	1.250	1.373	1.522
16 (10)	0.736	0.757	0.780	0.805	0.831	0.859	0.889	0.921	0.955	0.992	1.053	1.127	1.212	1.311	1.429
18 (11)	0.758	0.778	0.800	0.823	0.847	0.873	0.900	0.929	0.960	0.993	1.047	1.111	1.184	1.268	1.364
20 (12,5)	0.777	0.796	0.816	0.838	0.860	0.884	0.909	0.936	0.964	0.994	1.042	1.099	1.163	1.235	1.316
21 (13)	0.785	0.804	0.824	0.844	0.866	0.889	0.913	0.939	0.966	0.994	1.040	1.094	1.154	1.221	1.296
22 (14)	0.793	0.811	0.830	0.850	0.871	0.893	0.917	0.941	0.967	0.994	1.038	1.089	1.146	1.209	1.279
24 (15)	0.807	0.824	0.842	0.861	0.881	0.901	0.923	0.946	0.970	0.995	1.034	1.081	1.132	1.188	1.250
26 (16)	0.819	0.835	0.852	0.870	0.889	0.908	0.929	0.950	0.972	0.995	1.032	1.074	1.121	1.171	1.226
28 (17)	0.830	0.845	0.862	0.878	0.896	0.914	0.933	0.953	0.974	0.996	1.029	1.069	1.111	1.157	1.207
30 (19)	0.839	0.854	0.870	0.886	0.902	0.920	0.938	0.956	0.976	0.996	1.027	1.064	1.103	1.145	1.190
32 (20)	0.848	0.862	0.877	0.892	0.908	0.924	0.941	0.959	0.977	0.996	1.026	1.060	1.096	1.135	1.176
34 (21)	0.855	0.869	0.883	0.898	0.913	0.928	0.944	0.961	0.978	0.996	1.024	1.056	1.090	1.126	1.164
36 (22)	0.862	0.875	0.889	0.903	0.917	0.932	0.947	0.963	0.980	0.997	1.023	1.053	1.084	1.118	1.154
38 (24)	0.869	0.881	0.894	0.907	0.921	0.935	0.950	0.965	0.981	0.997	1.022	1.050	1.080	1.111	1.145
40 (25)	0.874	0.886	0.899	0.912	0.925	0.938	0.952	0.967	0.982	0.997	1.020	1.047	1.075	1.105	1.136
42 (26)	0.880	0.891	0.903	0.916	0.928	0.941	0.955	0.968	0.982	0.997	1.019	1.045	1.071	1.099	1.129
44 (27)	0.884	0.896	0.907	0.919	0.931	0.944	0.957	0.970	0.983	0.997	1.019	1.043	1.068	1.095	1.122
46 (28)	0.889	0.900	0.911	0.922	0.934	0.946	0.958	0.971	0.984	0.997	1.018	1.041	1.065	1.090	1.117
48 (29)	0.893	0.904	0.914	0.925	0.937	0.948	0.960	0.972	0.985	0.997	1.017	1.039	1.062	1.086	1.111
50 (31)	0.897	0.907	0.917	0.928	0.939	0.950	0.962	0.973	0.985	0.998	1.016	1.037	1.059	1.082	1.106

Vm = number of km (miles) covered per hour.

Interpolation is allowed between the temperatures shown in the column headings.

MICHELIN EARTHMOVER TIRES FOR SPECIFIC USES

1°) Firstly, if the dimension exists for your machine and your use, you must use it (example: mechanical handling tires for handling use; heavy truck tires for construction use or for builder use, etc.)

2°) For all other cases, you must contact your Michelin Representative.



APPROXIMATE LOOSE MATERIAL DENSITIES (t/m³)

MATERIAL	DENSITY	MATERIAL	DENSITY
Alkaline potash	**1.3 to 1.5**	Copper ore	**1.6**
Anthracite	**0.9 to 1.1**	Iron ore	**2.4 to 3.3**
Clay (dry)	**1 to 1.1**	Pyrites	**2.6**
Clay (moist)	**1.2 to 1.3**	Earth (dry)	**1.2 to 1.5**
Clay (wet)	**1.3 to 1.4**	Earth (moist)	**1.3 to 1.4**
Bauxite	**1.5**	Earth (wet)	**1.4 to 1.5**
Mud	**1.8**	Overburden	**1.7 to 1.8**
Limestone	**1.5 to 1.6**	75% rock–25% earth	**1.9 to 2**
Coal	**0.7**	50% rock–50% earth	**1.7 to 1.8**
Quicklime	**0.9 to 1.3**	25% rock–75% earth	**1.6**
Slaked lime	**1.1 to 1.3**		
Chalk	**1.8 to 2.6**	Sand (dry)	**1.5**
Granite	**1.6 to 1.7**	Sand (moist)	**1.9**
Sandstone	**1.6**	Gravel (dry)	**1.7 to 1.8**
Crushed gypsum	**1.6**	Gravel (moist)	**2**
Marl clay	**2.2**		

APPROXIMATE LOOSE MATERIAL DENSITIES UNITS OF MEASURE AND CONVERSION TABLES

UNITS OF MEASURE AND CONVERSION TABLES

MEASUREMENT	ABBREVIATION	CONVERSION FACTOR	ABBREVIATION	MEASUREMENT	CONVERSION FACTOR	ABBREVIATION
TORQUE						
pound-foot	lb ft	**x 0.1383**	= m kg	kilogamme metre	**x 7.233**	= lb ft
kilogamme metre	m kg	**x 9.81**	= m N	Newton metre	**x 0.102**	= m kg
LENGTH						
inch	in	**x 0.0254**	= m	metre	**x 39.37**	= in
foot	ft	**x 0.3048**	= m	metre	**x 3.281**	= ft
yard	yd	**x 0.9144**	= m	metre	**x 1.0936**	= yd
mile	ml	**x 1.6093**	= km	kilometre	**x 0.6214**	= ml
LOAD						
pound	lb	**x 0.4536**	= kg	kilogramme	**x 2.205**	= lb
long ton (G.B.) 2240 lb	lg ton	**x 1.016**	= t	metric tonne	**x 0.984**	= lg ton
short ton (U.S.) 2000 lb	sh ton	**x 0.907**	= t	metric tonne	**x 1.103**	= sh ton
DENSITY						
pound per cubic foot	lb/cu ft	**x 16.0184**	= kg/m^3	kilogramme/m^3	**x 0.625**	= lb/cu ft
pound per cubic yard	lb/cu yd	**x 0.5933**	= kg/m^3	kilogramme/m^3	**x 1.686**	= lb/cu yd
PRESSURE						
kilo-pascal	kPa	**x 0.01**	= bar	bar	**x 100**	= kPa
atmosphere (at sea level)	atm	**x 0.986**	= bar	bar	**x 1.014**	= atm
pound per square inch	P.S.I.	**x 0.0703**	= kg/cm^2	kilogramme/cm^2	**x 14.22**	= P.S.I.
pound per square inch	P.S.I.	**x 0.069**	= bar	bar	**x 14.513**	= P.S.I.
pound per square inch	P.S.I.	**x 0.068**	= atm	atmosphere	**x 14.7**	= P.S.I.
pound per square inch	P.S.I.	**x 6.895**	= kPa	kilo Pascal	**x 0.145**	= P.S.I.
POWER						
french horse power	C.V.	**x 0.7355**	= KW	kilowatt	**x 1.36**	= C.V.
horse power	H.P.	**x 0.7457**	= KW	kilowatt	**x 1.34**	= H.P.
french horse power	C.V.	**x 0.98**	= H.P.	horse power	**x 1.014**	= C.V.
VOLUME/CAPACITY						
cubic foot	cu ft	**x 0.02832**	= m^3	cubic metre	**x 35.31**	= cu ft
cubic yard	cu yd	**x 0.7646**	= m^3	cubic metre	**x 1.308**	= cu yd
gallon (U.S.)	gal	**x 3.7854**	= l	liter	**x 0.2642**	= gal
TEMPERATURE						
degree fahrenheit	°F	**- 32 et x (5/9)**	= °C	degree Celsius	**x (9/5) et + 32**	= °F

FOOTNOTES & CAUTION

(1) ..... *See page 140 & 166* ..... *explanation about TKPH (TMPH)*

(2) ..... *See page 136* ..... *explanation of the different characteristics*

(3) ..... *explanation about rim size marking*
example: ..... 44.00/5.0 [6.0]
the 1st value indicates rim width in inch) (in this example: 44 inches)
the 2nd value indicates the height of the rim flange (in this example: 5 inches)
the 3rd value indicates the width of the rim flange (in this example: 6 inches)

(5) ..... *increase pressure by 0,5 bar on the loader front axle*

(6) ..... *See page 144* ..... *and in the EARTHMOVER TIRE USE AND MAINTENANCE GUIDE BY MICHELIN*
explanation about TG rim

(8) ..... *manufacture is discontinued (commercial description highlighted to attract attention)*

(9) ..... *special order only (commercial description highlighted to attract attention) Consult your local Michelin representative*

(10) ..... *See page 136, 144, 145, 160 to 170* ..... *explanation of the various tables of load according to the use and to the tire position and how to determine pressures*
It is imperative to follow the explanation given Not following these instructions may impact tire performance

(12) ..... *never exceed 6 bar*

(13) ..... *The removable flange must be continuous along its circumference, with no opening*
** The flange must be continuous in full-circumference, not open or split*
*** The «H» is on the tire side, the G of the norm is on the external part and until the rim bole*

(14) ..... *Diameter: Left column, fixed side; right column, removable side.*

All values shown in these tables are maximums and should not be exceeded.

NOTES

NOTES

NOTES



MICHELIN

MICHELIN TECHNICAL DATA | 2022-23 EDITION
EARTHMOVER TIRES